City of Grand Island

Tuesday, March 24, 2020

Council Session

Item G-5

#2020-69 - Approving Bid Award - Water Main Project 2020-W-5 - Pleasant View Drive

Staff Contact: Tim Luchsinger, Stacy Nonhof

Council Agenda Memo

From: Timothy Luchsinger, Utilities Director
Stacy Nonhof, Interim City Attorney

Meeting: March 24, 2020

Subject: Water Main Project 2020-W-5 – Pleasant View

Presenter(s): Timothy Luchsinger, Utilities Director

Background

It was discovered that the piping network in both the Pleasant View Drive/Phoenix and Pleasant View Drive/Delaware intersections do not meet current standards for clearances between water main and storm sewer. Water Main Project 2020-W-5 will resolve the previously unknown conflict. A site map of the work area is attached for reference.

Discussion

Bidding documents were advertised in accordance with City Procurement Codes. Three (3) bids were received and publicly opened at 2:00 p.m. on March 10, 2020. Tabulated below is the bid amount from each of the bidders:

Bidder	Bid Security	Exceptions	Bid
Starostka Group Unlimited Grand Island, NE	Universal Surety Company	None	$ 98,855.06
Myers Construction, Inc. Broken Bow, NE	Inland Insurance Company	None	$127,870.72
Diamond Engineering Company Grand Island, NE	Universal Surety Company	None	$147,285.74

The estimate for this project is $125,000. The Staroska bid is compliant with the specifications and recommended to be accepted by the Department.

Alternatives

It appears that the Council has the following alternatives concerning the issue at hand. The Council may:

1. Move to approve
2. Refer the issue to a Committee
3. Postpone the issue to future date
4. Take no action on the issue

Recommendation

City Administration recommends that the Council award the contract to the low qualified bidder, Starostka Group Unlimited of Grand Island, Nebraska, in the amount of $98,855.06.

Sample Motion

Move to approve the bid from Starostka Group Unlimited in the amount of $98,855.06 for the construction of Water Main Project 2020-W-5.

Purchasing Division of Legal Department
INTEROFFICE MEMORANDUM

CITY OF GRAND ISLAND

Stacy Nonhof, Purchasing Agent

Working Together for a Better Tomorrow, Today

BID OPENING

BID OPENING DATE:	**March 10, 2020 at 2:00 p.m.**
FOR:	**Water Main Project 2020-W-5**
DEPARTMENT:	**Utilities**
ESTIMATE:	**$125,000.00**
FUND/ACCOUNT:	**525**
PUBLICATION DATE:	**February 25, 2020**
NO. POTENTIAL BIDDERS:	**11**

SUMMARY

Bidder:	**The Diamond Engineering Co.** **Grand Island, NE**	**Starostka Group Unlimited, Inc.** **Grand Island, NE**
Bid Security:	**Universal Surety Co.**	**Universal Surety Co.**
Exceptions:	**None**	**None**
Bid Price:	**$147,285.74**	**$98,855.06**

Bidder:	**Myers Construction. Inc.** **Broken Bow, NE**
Bid Security:	**Inland Insurance Co.**
Exceptions:	**None**
Bid Price:	**$127,870.72**

cc: Tim Luchsinger, Utilities Director
Jerry Janulewicz, City Administrator
Stacy Nonhof, Purchasing Agent
Pat Gericke, Admin. Asst. Utilities
Patrick Brown, Finance Director
Ryan Schmitz, Asst. Utilities Director

P2192

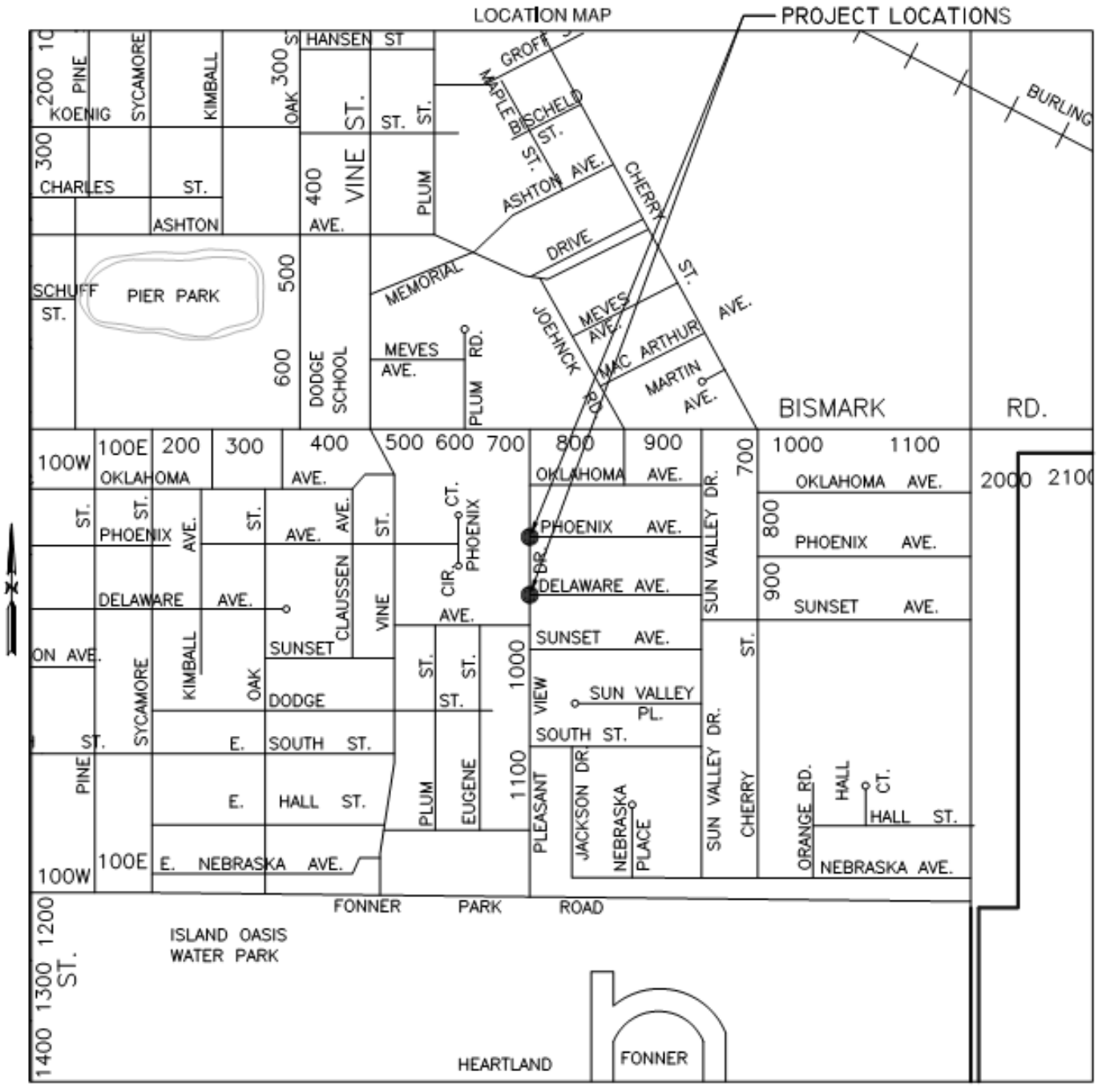
LOCATION MAP
PROJECT LOCATIONS
HANSEN ST
GROFF
BISCHELD ST.
ASHTON AVE.
CHERRY
BURLING
DRIVE
MEMORIAL
JOEHNCK
MEVES AVE.
MAC ARTHUR
MARTIN AVE.
BISMARK RD.
PIER PARK
SCHUFF ST.
DODGE SCHOOL
MEVES AVE.
PLUM
VINE
OAK
PINE
SYCAMORE
KIMBALL
CHARLES ST.
ASHTON AVE.
OKLAHOMA AVE.
PHOENIX AVE.
DELAWARE AVE.
SUNSET AVE.
DODGE
SOUTH ST.
E. HALL ST.
E. NEBRASKA AVE.
CLAUSSEN
CIR.
CT.
DR.
SUN VALLEY DR.
SUN VALLEY PL.
VIEW
PLEASANT
JACKSON DR
NEBRASKA PLACE
EUGENE
ORANGE RD.
HALL CT.
FONNER PARK ROAD
ISLAND OASIS WATER PARK
HEARTLAND
FONNER

CITY OF GRAND ISLAND

Working Together for a Better Tomorrow. Today.

WATER MAIN PROJECT 2020-W-5

PLEASANT VIEW DRIVE CONFLICTS

CONTRACT DOCUMENTS

THIS DOCUMENT WAS ORIGINALLY SEALED AND ISSUED BY JAMIE L. ROYER E-17387, ON 2/10/2020 THIS MEDIA SHOULD NOT BE CONSIDERED A CERTIFIED DOCUMENT AND SHOULD BE USED FOR REFERENCE ONLY.

Bid Opening Date/Time:
March 10, 2020 @ 2:00 PM. (Local Time)

City of Grand Island, City Hall
100 East 1st Street, P.O. Box 1968
Grand Island, NE 68802-1968

Contacts:

City of Grand Island
Utilities Department (308) 385-5463

TABLE OF CONTENTS

WATER MAIN PROJECT 2020-W-5

FOR

CITY OF GRAND ISLAND, NEBRASKA

A. Bidders Checklist

B. Advertisement to Bidders

C. Instructions to Bidders

D. Form of Contractor's Bid

E. Insurance Requirements

F. Contract Agreement

G. Specifications

- I-A. Special Provisions -- Water Main
- Division I General Specifications
- Division II Portland Cement Concrete Paving
- Division III Curb and Gutter, Sidewalks, and Driveways
- Division V Storm and Sanitary Sewer
- Division VI Water Mains

H. Appendix

- Recloser Policy
- NPDES Construction Dewatering Discharge Permit
- Standard Plan Drawings
- Water Main Project 2020-W-5 Construction Plans

CHECKLIST FOR BID SUBMISSION

CHECKLIST FOR BID SUBMISSION

WATER MAIN PROJECT 2020-W-5

FOR

CITY OF GRAND ISLAND, NEBRASKA

Bids must be received by the City Clerk before 2:00 p.m. (local time) on March 10, 2020.

The following items must be completed and submitted for your bid to be considered. All forms shall be downloaded from the Quest CDN website. Failure to submit the correct number of copies will result in your bid not being considered.

Check Box:

☐ Submittal of bid documents – **OPTION 1 Online through the Quest CDN website.**

- Completed Checklist For Bid Submission uploaded to the Quest CDN website.
- The completed and signed bid uploaded to the Quest CDN website.
- Bid bonds uploaded to Quest CDN website.

☐ Submittal of bid documents – **OPTION 2 Mailing – Delivering.**

- Completed Checklist For Bid Submission, and two (2) additional copies.
- The completed and signed bid, and two (2) additional copies.
- A certified check, cashier's check or bid bond in a separate envelope attached to the outside of the envelope containing the bid. Each envelope must be clearly marked indicating its contents. Failure to submit the necessary qualifying information in clearly marked envelopes will result in your bid not being opened.

REQUIRED FOR ALL OPTIONS

☐ Acknowledgment of Addenda Number(s) _____.

☐ Total bid and firm unit pricing and breakout of sales tax as applicable. (See Bid Form.)

☐ By checking this box, Bidder claims the individual pricing as listed on the Bid Data Form is proprietary information and should not be released under a public records request. The total amount of the bid is not considered proprietary information and will be released pursuant to City Procurement Code.

_____

Bidder Company Name

_____ _____

Name of Person Completing Bid – Please Print | Bidder Email Address

_____ _____

Signature | Date

_____ _____

Telephone No. | Fax No.

ADVERTISEMENT TO BIDDERS

ADVERTISEMENT TO BIDDERS

WATER MAIN PROJECT 2020-W-5
PLEASANT VIEW DRIVE CONFLICTS
FOR
CITY OF GRAND ISLAND, NEBRASKA

Bids can be submitted online or to the office of the City Clerk, 100 East First St., Grand Island, NE 68801 or P.O. Box 1968, Grand Island, NE 68802 until **2:00 p.m. (local time) on March 10, 2020** for furnishing labor, tools, equipment, materials, and doing all work for the complete installation of Water Main Project 2020-W-5, including but not limited to 6" dia. ductile iron water main lowerings, water main abandonment, pavement removal and replacement and related work within the intersections of Pleasant View Drive and Phoenix Avenue and Pleasant View Drive and Delaware Avenue, FOB the City of Grand Island. Bids will be publicly opened at this time in the Grand Island City Clerk's office on 1st floor of City Hall. Bids received after the specified time will not be considered.

The Bid proposal and any Addenda may be viewed on-line at www.grand-island.com under *Bids & Proposals – Bid Documents*. Bidding documents, plans, and specifications for use in preparing bids may be downloaded from the Quest CDN website, www.QuestCDN.com for a thirty dollar ($30) fee. Bids must be uploaded to the Quest CDN website or received at the City Clerk's office (100 East First St., Grand Island, NE 68801) before the specified time to be considered. If mailing, or delivering to City Clerk's office, the bidder shall provide the original signed bid documents and two (2) additional copies of the Form of Contractor's Bid and three (3) copies of the Checklist for Bid Submission.

Each bidder shall submit with their bid a certified check, a cashier's check or bid bond payable to the City Treasurer in an amount no less than five percent (5%) of the bid price which shall guarantee good faith on the part of the bidder and the entering into a contract within twenty (20) days, at the bid price, if accepted by the City. Bid bonds must be issued by surety companies authorized to do business in the State of Nebraska. **When submitting bid online, the bid bond shall be uploaded to the Quest CDN website, www.QuestCDN.com. When mailing or delivering bid, your certified check, cashier's check or bid bond must be submitted in a separate envelope attached to the outside of the envelope containing the bid. Each envelope must be clearly marked indicating its contents. Failure to submit the necessary qualifying information in clearly marked and separate envelopes will result in your bid not being opened or considered.**

The successful bidder will be required to comply with fair labor standards as required by Nebraska R.R.S. 73-102 and comply with Nebraska R.R.S. 48-657 pertaining to contributions to the Unemployment Compensation Fund of the State of Nebraska. Successful bidder shall maintain a drug free workplace. Every public contractor and his, her or its subcontractors who are awarded a contract by the City for the physical performance of services within the State of Nebraska shall register with and use a federal immigration verification system to determine the work eligibility status of new employees physically performing services within the State of Nebraska.

Successful bidder shall comply with the City's insurance requirements and supply performance and payment bonds.

Bids will be evaluated by the Purchaser based on price, quality, adherence to schedule, plan and specification, economy and efficiency of operation, experience and reputation of bidder, ability, capacity, and skill of the bidder to perform contract required and adaptability of the particular items to the specific use intended.

The Purchaser reserves the right to reject any or all bids and to waive irregularities therein and to accept whichever bid that may be in the best interest of the City, at its sole discretion.

No bidder may withdraw their bid for a period of sixty (60) days after date of opening bids.

RaNae Edwards, City Clerk

INSTRUCTIONS TO BIDDERS

INSTRUCTIONS TO BIDDERS

WATER MAIN PROJECT 2020-W-5
PLEASANT VIEW DRIVE CONFLICTS
FOR
CITY OF GRAND ISLAND, NEBRASKA

PROJECT DESCRIPTION: The project involves, but is not limited to: furnishing labor, tools, equipment, materials, and doing all work for the complete installation of Water Main Project 2020-W-5, FOB the City of Grand Island, NE. The work to be performed under this contract is located within the intersections of Pleasant View Drive and Phoenix Avenue and Pleasant View Drive and Delaware Avenue.

Refer to the plans for exact location and alignment.

BIDDING DOCUMENTS: Bid proposals and Addenda are available for viewing on-line at www.grand-island.com under *Bids & Proposals – Bid Documents*, free of charge. For a thirty dollar ($30) fee, the documents can be downloaded, and bid may be submitted at Quest CDN, www.QuestCDN.com.

BIDDER QUALIFICATION: Bids will be received only from qualified bidders. A bidder will be considered qualified if they are a recognized supplier or manufacturer of materials and items similar to that specified herein with complete factory facilities in the United States and have experience in the design and manufacture of items of equal or greater size than that specified herein. Bidders shall furnish a list of three (3) projects of similar size, magnitude and requirements which they have satisfactorily performed within the last three (3) years. The list shall state the name of the purchaser, locations of the projects, date of purchase, size, type and operating conditions. Such data will be used to assist in determining the qualifications of the bidder. Bidder must comply with all applicable Federal, State and local rules and regulations

OPTION 1 - SUBMISSION OF BIDS and BIDDER SECURITY: When submitting online, bidders shall complete the bid forms within the contract document available for download and upload them to the Quest CDN website, www.QuestCDN.com; along with the completed Checklist For Bid Submission.

Bidder's bonds shall be uploaded to the Quest CDN website.

OPTION 2 - SUBMISSION OF BIDS and BIDDER SECURITY: When mailing or delivering, bids shall be submitted on the bid forms downloaded from Quest CDN website and addressed to the City Clerk, 100 East First St., Grand Island, NE 68801 or P.O. Box 1968, Grand Island, NE 68802 and plainly marked, "Bid for Water Main Project 2020-W-5". The bidder shall provide three (3) copies of the Checklist For Bid Submission; and the original bid form and two (2) additional copies of the Contractor's Bid. Failure to submit the correct number of copies will result in your bid not being considered.

If bid is submitted by mail, bidder security shall be enclosed in a special envelope marked, "BIDDER SECURITY / BID FOR WATER MAIN PROJECT 2020-W-5". The envelope shall contain only a cashier's check, certified check, or bidder's bond. This special envelope shall be attached to a sealed envelope containing the bid and any other requested bid materials.

CHECKS OR BID BONDS: Bid bonds or checks of the unsuccessful bidders will be returned when their bids have been rejected and not to exceed sixty (60) days from the date bids are opened. All bids shall remain in force for this sixty (60) day period. The bid bond of the successful bidder will be returned when the Contracts are signed by both parties and necessary bonds supplied. Should the Purchaser make an award to a Contractor who refuses to enter into Contract and furnish the required bonds within twenty (20) days after notification of acceptance, then the bid security which has been deposited with the Purchaser will be forfeited to the Purchaser as liquidated damages.

Bids of an incomplete nature or subject to multiple interpretations may, at the option of the purchaser, be rejected as being irregular.

PERFORMANCE AND PAYMENT BONDS: A Performance Bond in an amount equal to one-hundred percent (100%) of the Contract Price, conditioned upon faithful performance of the Contract and payment of all people supplying labor and/or furnishing materials will be required coincident with the execution of the Contract. According to Nebraska Law, the surety company executing the Performance Bond must be authorized to do business in the State of Nebraska.

A Payment Bond, in an amount equal to one-hundred percent (100%) of the Contract Price for protection of all people supplying labor and materials to the Contractor or its subcontractors for the performance of the work provided for in the Contract will be required coincident with the execution of the Contract. In accordance with Nebraska Law, the surety company executing the Payment Bond must be authorized to do business in the State of Nebraska.

LOCAL CONDITIONS: Each bidder shall have an authorized representative visit the site of the work and thoroughly inform themselves of all conditions and factors which would affect the work and the cost thereof, including the arrangement and conditions of existing or proposed structures affecting or affected by the proposed work; the procedure necessary for maintenance of uninterrupted operation; the availability and cost of labor and facilities for transportation, handling, and storage of materials and equipment.

It is understood and agreed that all such factors have been investigated and considered in the preparation of every bid submitted. No claims for financial adjustment to any Contract awarded for the work under these specifications and documents will be permitted by the City which are based on lack of such prior information, or its effect on the cost of the work.

BASE BID: The bidder is expected to base their bid for furnishing and installing materials and items complying fully with these specifications; and in the event materials or items which do not conform are listed in the bid, the bidder will be responsible for furnishing materials and items which fully conform at no change in the bid price.

ALTERNATE BIDS: It is the desire of the Owner that the bidder base their bid price for this project on the written specifications and plans. If an alternate bid or bids are submitted by a bidder, the bidder shall first submit a bid price as above described and then describe an alternate bid. Failure to do so may be reason for not extending any consideration to alternate bids.

MODIFICATION OF BIDS: Bids may be modified or withdrawn by an appropriate document duly executed in the manner that a bid must be executed and delivered to the place where bids are to be submitted at any time prior to the final time set for receiving bids.

Any modification should not reveal the amended bid price but should provide only the addition, subtraction or other modifications. A duly-executed document confirming the modification shall be submitted within three (3) days after bids are opened.

ADDENDA: Any addendum to the specifications issued during the time allowed for preparation of bids shall be covered in the bid and, upon closing, shall become a part of the specifications. Each addendum issued before the date of the letting will be uploaded to Quest CDN, www.QuestCDN.com. All bidders with a Quest CDN account will be notified by email that an addendum has been issued. Bidder will not be able to submit their bid until addendum has been viewed, signed and has been uploaded to the website.

TAXES -- WATER MAIN: The Grand Island Utilities Department is a non-exempt body and, as such, is required to pay City Sales Tax (which at present is 2.0%) and State Sales Tax (which at present is 5.5%). Therefore, all applicable taxes shall be included in the unit price relative to the water main and shall be paid by the Contractor as part of the Contract price. The Contract price will be adjusted to compensate for any changes in taxes applicable or changes in tax rates which occur subsequent to the bid opening date and prior to completion of the Contract, in a manner equitable to both parties.

BID EVALUATION: Bids will be evaluated by the Purchaser based on price, quality, adherence to schedule, plan and specification, economy and efficiency of operation, experience and reputation of bidder, ability, capacity, and skill of the bidder to perform Contract requirements and adaptability of the particular items to the specific use intended. The Purchaser reserves the right to reject any or all bids and to waive irregularities therein and to accept whichever bid that may be in the best interest of the City.

INSURANCE COVERAGE: The Contractor shall purchase and maintain at their expense as a minimum insurance coverage of such types and in such amounts as are specified herein to protect Contractor and the interest of Owner and others from claims which may arise out of or result from Contractor's operations under the Contract Documents, whether

such operations be by Contractor or by any subcontractor or anyone directly or indirectly employed by any of them or for whose acts any of them may be legally liable. Failure of Contractor to maintain proper insurance coverage shall not relieve them of any contractual responsibility or obligation.

GRATUITIES AND KICKBACKS: City Code states that it is unethical for any person to offer, give, or agree to give any City employee or former City employee, or for any City employee or former City employee to solicit, demand, accept, or agree to accept from another person, a gratuity or an offer of employment in connection with any decision, approval, disapproval, recommendation, or preparation of any part of a program requirement or a purchase request, influencing the content of any specification or procurement standard, rendering of advice, investigation, auditing, or in any other advisory capacity in any proceeding or application, request for ruling, determination, claim or controversy, or other particular matter, pertaining to any program requirement or a contract or subcontract, or to any solicitation or proposal therefore. It shall be unethical for any payment, gratuity, or offer of employment to be made by or on behalf of a subcontractor under a contract to the prime contractor or higher tier subcontractor or any person associated therewith, as an inducement for the award of a subcontract or order.

DRUG-FREE WORKPLACE POLICY: Bidders shall furnish upon request, a copy of their drug-free workplace policy.

FINANCIAL STATEMENT: The Bidder shall furnish, upon request, a complete financial statement signed by the Bidder if an individual, by all partners if the Bidder is a partnership and, by the President or Secretary if the Bidder is a corporation.

EQUAL EMPLOYMENT OPPORTUNITY: The Contractor agrees that during the performance of this Contract not to discriminate in hiring or any other employment practice on the basis of race, color, religion, sex, disability, age or national origin, and to comply with Executive Order 11,246 of September 24, 1965, and the rules, regulations and relevant orders of the Secretary of Labor, and Chapter 20 of the Reissue Revised Statutes of the State of Nebraska.

CORRESPONDENCE: Correspondence regarding drawings, instruction manuals, and other engineering data shall be clearly marked "WATER MAIN PROJECT 2020-W-5" and sent through:

Purchasing Division of the Legal Department
City of Grand Island
P. O. Box 1968
Grand Island, NE 68802-1968
Telephone (308) 385-5420

REQUEST FOR INTERPRETATION: If any person contemplating submitting a bid for this Contract is in doubt as to the true meaning of any part of the specifications or other proposed Contract documents, they may submit to the Purchasing Division of the Legal Department a written request for an interpretation thereof. The person submitting the

request will be responsible for its prompt delivery. Any interpretation of the proposed documents will be made only by addendum duly issued and/or delivered to each person receiving a set of such documents. The addenda, upon closing, shall become a part of the Contract. The Purchasing Division of the Legal Department will not be responsible for any other explanation or interpretation of the proposed documents.

LOCAL BIDDER PREFERENCE: In case of tied low bids, all other things being equal, preference shall be given in the following order:

1. To those bidders who manufacture their products within the limits of the City of Grand Island.

2. To those bidders who manufacture their products within the limits of the County of Hall.

3. To those bidders who package, process, or through some other substantial operation have employees and facilities for these purposes in the City of Grand Island.

4. To those bidders who package, process, or through some other substantial operation have employees and facilities for these purposes in the County of Hall.

5. To those bidders who maintain a bona fide business office in the City of Grand Island, whose products may be made outside the confines of the City of Grand Island.

6. To those bidders who maintain a bona fide business office in the County of Hall, whose products may be made outside the confines of the County of Hall.

7. To those bidders whose commodities are manufactured, mined, produced, or grown within the state of Nebraska, and to all firms, corporations, or individuals doing business as Nebraska firms, corporations or individuals, when quality is equal or better, and delivered price is the same or less than the other bids received.

8. To those bidders whose commodities are manufactured, mined, produced, or grown within the United States of America, and to all firms, corporations, or individuals doing business as firms registered in states other than Nebraska, when quality is equal or better, and delivered price is the same or less than the other bids received.

PROJECT TIME FRAME: No work shall commence until the Certificate of Insurance and bonds are approved by the City, the Contract is executed, and a Notice to Proceed is issued. The Contractor shall coordinate with the City of Grand Island Utilities Department relative to scheduling work.

All work, including restoration, shall be completed by August 21, 2020.

REQUESTS FOR PAYMENT: The City of Grand Island will make payments only after approval at regularly scheduled City Council meetings. These meetings typically occur the second and fourth Tuesday each month. Requests for payment must be received no less than ten (10) working days prior to the designated meeting to allow proper review and consideration. Partial payments will be made upon request from the Contractor. Requests may be submitted once a month. Request will be based on amount of work executed in an approved manner. No materials on hand payment will be made for any items on this project.

TITLE VI: The City of Grand Island, in accordance with Title VI of Civil Rights Act of 1964, 78 Stat.252, 42 U.S.C 2000d to 2000d-4 and Title 49, Code of Federal Regulations, Department of Transportation, Subtitle A, Office the Secretary, Part 21, Nondiscrimination in Federally assisted programs of the Department of Transportation issued pursuant to such Act, hereby notified all bidden that it will affirmatively insure that in any contact entered into pursuant to this advertisement, minority business enterprises will be afforded full opportunity to submit bids in response to this invitation and will not be discriminated against on the grounds of race, color, or national origin, sex, age and disability/handicap in consideration for an award.

SECTION 504/ADA NOTICE TO THE PUBLIC: The City of Grand Island does not discriminate on the basis of disability in admission of its programs, services, or activities, in access to them, in treatment of individuals with disabilities, or in any aspect of their operations. The City of Grand Island also does not discriminate on the basis of disability in its hiring or employment practices.

This notice is provided as required by Title II of the Americans with Disabilities Act on 1990 and Section 504 of the Rehabilitation Act of 1973. Questions, complaints, or requests for addition information or accommodation regarding the ADA and Section 504 may be forwarded to the designated ADA and Section 504 compliance coordinator.

Jerry Janulewicz
(308) 385-5444 ext. 119
100 E. First Street
Grand Island, NE 68801
Monday-Friday 8:00 am to 5:00 pm

FORM OF CONTRACTOR’S BID

CONTRACTOR'S BID

WATER MAIN PROJECT 2020-W-5
PLEASANT VIEW DRIVE CONFLICTS
FOR
CITY OF GRAND ISLAND, NEBRASKA

TO THE MEMBERS OF THE COUNCIL
CITY OF GRAND ISLAND
GRAND ISLAND, NEBRASKA

THE UNDERSIGNED BIDDER, having examined the plans, specifications, general and special conditions, other proposed Contract documents, all addenda thereto and being acquainted with and fully understanding (a) the extent and character of the work covered by this bid, (b) the location, arrangement and specified requirements for the proposed work, (c) the location, character and condition of existing streets, roads, highways, railroads, pavements, surfacing, walks, driveways, curbs, gutters, trees, sewers, utilities, drainage courses and structures and other installations, both surface and underground, which may affect or be affected by the proposed work, (d) the nature and extent of the excavations to be made and the handling and rehandling requirements, including the possible constraints of dewatering due to ground water, (f) the difficulties and hazards to the work which might be caused by storm and flood water, delivery facilities, and (h) all other factors and conditions affecting or which may be affected by the work,

HEREBY PROPOSES to furnish all required materials, supplies, equipment, tools and plant, to perform all necessary labor and supervision, and to construct, install, erect, equip and complete all work stipulated in, required by and in accordance with the Contract documents and the plans, specifications and other documents referred to therein (as altered, amended or modified by all addenda thereto) for;

IN CONSIDERATION OF THE FOLLOWING UNIT PRICES. These prices shall be used to adjust the bid price in the event the specifications or plans and drawings are altered or changed by the City due to unforeseen conditions. The unit prices shall be used in conjunction with, GENERAL SPECIFICATIONS, Section 9.04, titled "Payment for Extra Work." These prices will be used as the established price for any additions or deductions to the contract work. Unit prices shall include all materials, supplies, equipment, labor, and taxes necessary to furnish and install the unit complete. **The contractor will be paid on the basis of actual quantity times unit price:**

****

ITEM

D.1 **TOTAL BID FOR WATER MAIN PROJECT 2020-W-5**
(item D.1 must equal total sum of items D.1.01 through D.1.27)

_____ $ _____
(Words) (Figures)

ITEM	DESCRIPTION	ESTIMATED QUANTITY	UNIT PRICE	TOTAL PRICE
D.1.01	6" S.J. D.I. PIPE	117.3 LF	$ _____	$ _____
D.1.02	6"x6" M.J. TEE	1 EA	$ _____	$ _____
D.1.03	6" GATE VALVE	5 EA	$ _____	$ _____
D.1.04	6"x45° M.J. BEND	8 EA	$ _____	$ _____
D.1.05	6" RETAINER GLAND	16 EA	$ _____	$ _____

ITEM	DESCRIPTION	ESTIMATED QUANTITY	UNIT PRICE	TOTAL PRICE
D.1.06	DUC-LUGS & REDI-ROD	4 SET	$ _____	$ _____
D.1.07	VALVE BOX	3 EA	$ _____	$ _____
D.1.08	6” SLEEVE COUPLING	3 EA	$ _____	$ _____
D.1.09	8 MIL. POLYWRAP	117.3 LF	$ _____	$ _____
D.1.10	THRUST BLOCK	9 EA	$ _____	$ _____
D.1.11	FIRE HYDRANT	1 EA	$ _____	$ _____
D.1.12	6”X24” M.J. OFFSET FITTING W/ RESTRAINED JOINT	1 EA	$ _____	$ _____
D.1.13	ABANDON VALVE IN PLACE	1 EA	$ _____	$ _____
D.1.14	REMOVE, SALVAGE, REUSE VALVE BOX	2 EA	$ _____	$ _____
D.1.15	REMOVE AND SALVAGE VALVE	1 EA	$ _____	$ _____
D.1.16	REMOVE EXISTING WATER MAIN	83.0 LF	$ _____	$ _____
D.1.17	ABANDON EXISTING WATER MAIN INSIDE MANHOLE	2 EA	$ _____	$ _____
D.1.18	REMOVE CURB AND GUTTER	114.3 LF	$ _____	$ _____
D.1.19	REPLACE CURB AND GUTTER	114.3 LF	$ _____	$ _____
D.1.20	REMOVE CONCRETE ROADWAY	248.8 SY	$ _____	$ _____
D.1.21	REPLACE CONCRETE ROADWAY (47B MODIFIED)	248.8 SY	$ _____	$ _____
D.1.22	REMOVE SIDEWALK	398.1 SF	$ _____	$ _____
D.1.23	REPLACE SIDEWALK	398.1 SF	$ _____	$ _____
D.1.24	ADA RAMP AT DELAWARE TYPE 2	2 LS	$ _____	$ _____
D.1.25	SODDING	332.4 SF	$ _____	$ _____
D.1.26	DEWATERING	2 LS	$ _____	$ _____
D.1.27	TRAFFIC CONTROL	2 LS	$ _____	$ _____

****

COMPLETION DATE: If awarded under the terms of these Contract documents, the undersigned Bidder agrees to complete all work, including restoration, by **August 21, 2020.**

EXCEPTIONS TO SPECIFICATIONS: Each Bidder shall carefully check all requirements herein set forth and shall offer items which fully comply with these requirements or shall plainly set forth all points, features, conditions, specifications, etc., wherein the Bidder's items offered do not meet these specifications. Such exceptions as are made shall be listed by page number in the following blanks and shall be marked in ink on the pages of these specifications. Exceptions shall be explained in detail in a letter accompanying the bid. Reference shall not be made to other attachments for exceptions and supplementary terms. Failure to outline such exceptions as specifically stated herein

will require the successful Bidder to comply with these specifications. In case of conflict between the bid and these specifications, these specifications shall govern unless specific exceptions are listed by the Bidder.

Exceptions to specifications, pages: _____

_____

SALES TAX: The Grand Island Utilities Department is a non-exempt body and, as such, is required to pay City sales tax (which at present is 2.0%) and State sales tax (which at present is 5.5%). Therefore, all sales taxes relative to the water main shall be paid by the Contractor as part of the Contract price. If Bidder fails to include all applicable sales tax in their bid price, the City will add a 7.5 % figure to the bid price for evaluation purposes; however, the City will only pay actual sales tax due.

According to Nebraska Sales and Use Tax Requirements, Section 1-017, Contractors, check which option you have selected to file with the Nebraska Department of Revenue;

Option 1 (Section 1-017.05) _____
Option 2 (Section 1-017.06) _____
Option 3 (Section 1.017.07) _____

The choice of option is made by completing and mailing to the Department of Revenue, a Nebraska Sales and Use Tax Election for Contractors. This form must be filed within three (3) months after beginning to operate as a Contractor. If this form is not filed, the Contractor will be treated as a retailer under Option 1 for sales and use tax purposes.

The bidder shall provide the following breakdown of the water main bid information for use by the Grand Island Finance Department:

Sub-total for Sales Tax:	$ _____
Sub-total for Materials Cost:	$ _____
Sub-total for Services Cost (Labor and Incidental Services Rendered)	$ _____
TOTAL	$ _____

Total of above items must equal Item D.1

EXPERIENCE DATA: Each Bidder shall supply the following data on their experience:

Project Owner/Contact/Phone No.	Project Location	Completion Date
1.		
2.		
3.		

Additional Data: _____

_____

INSURANCE: Bidder acknowledges that bid includes compliance with the attached insurance requirements.

SITE INSPECTION: Authorized Representative _____ Date: _____

ADDENDA: Bidder acknowledges that Addenda Number(s) _____ were received and considered in bid preparation.

The undersigned Bidder agrees to furnish the required bond and to enter into a contract within twenty (20) days after acceptance of this bid, and further agrees to complete all work covered by the foregoing bid in accordance with specified requirements. **No work shall commence until the Certificate of Insurance and bonds (when required) are approved by the City, the contract is executed, and the Notice to Proceed is issued.**

Enclosed herewith is the required bid guarantee in the amount of

_____ Dollars (_____)
which the undersigned Bidder agrees is to be forfeited to and become the property of the City of Grand Island, Nebraska, as liquidated damages should this bid be accepted and a contract be awarded to them and fail to enter into a contract in the form prescribed and to furnish the required bond within twenty 20 days, but otherwise the aforesaid bid guarantee will be returned upon their signing the contract and delivering the approved bond.

It is understood and agreed that time is the essence of the Contract.

In submitting this bid, it is understood that the right is reserved by the City to reject any and all bids; to waive irregularities therein and to accept whichever bid that may be in the best interest of the City. It is understood that this bid may not be withdrawn until after sixty (60) days from bid opening.

In submitting this bid, the Bidder states that Bidder fully complies with, and will continue to comply with, applicable State fair labor standards as required by section 73-102 RRS, 1943 and also complies with, and will continue to comply with, section 48-657 RRS, 1943 pertaining to contributions to the Unemployment Compensation Fund of the State of Nebraska.

The undersigned Bidder hereby certifies (a) that this bid is genuine and is not made in the interest of or in the behalf of any undisclosed person, firm or corporation, and is not submitted in conformity with any agreement or rules of any group, association, organization or corporation, (b) that Bidder has not directly or indirectly induced or solicited any person, firm or corporation to refrain from bidding, (c) that Bidder has not sought, by collusion or otherwise, to obtain for themselves an advantage over any other Bidder or over the City of Grand Island, and (d) that Bidder has not directly or indirectly induced or solicited any other Bidder to put in a false or sham bid.

DATED _____

SIGNATURE OF BIDDER:

If an Individual:_____doing business

as _____

If a Partnership _____

by _____, member of firm.

If a Corporation: _____

by _____ (Seal)

Title _____

BUSINESS ADDRESS OF BIDDER _____

_____

TELEPHONE NUMBER OF BIDDER _____

FAX NUMBER OF BIDDER _____

E-MAIL ADDRESS OF BIDDER _____

INSURANCE REQUIREMENTS

MINIMUM INSURANCE REQUIREMENTS

WATER MAIN PROJECT 2020-W-5
PLEASANT VIEW DRIVE CONFLICTS
FOR
CITY OF GRAND ISLAND, NEBRASKA

You are urged to include in your bid compliance with the City's minimum insurance requirements; however, any non-compliance must be detailed in the Exceptions Section of the bid. Compliance with the specified OCP coverage is mandatory.

The successful bidder shall obtain insurance from companies authorized to do business in Nebraska of such types and in such amounts as may be necessary to protect the bidder and the interests of the City against hazards or risks of loss as hereinafter specified. This insurance shall cover all aspects of the Bidder's operations and completed operations. Failure to maintain adequate coverage shall not relieve bidder of any contractual responsibility or obligation. Minimum insurance coverage shall be the amounts stated herein or the amounts required by applicable law, whichever are greater.

1. WORKERS COMPENSATION AND EMPLOYER'S LIABILITY

This insurance shall protect the Bidder against all claims under applicable State workers compensation laws. This insurance shall provide coverage in every state in which work for this project might be conducted. The liability limits shall not be less than the following:

Workers Compensation	Statutory Limits
Employers Liability	$100,000 each accident
	$100,000 each employee
	$500,000 policy limit

2. BUSINESS AUTOMOBILE LIABILITY

This insurance shall be written in comprehensive form and shall protect the Bidder, Bidder's employees, or subcontractors from claims due to the ownership, maintenance, or use of a motor vehicle. The liability limits shall be not less than the following:

Bodily Injury & Property Damage	$ 500,000 Combined Single Limit

3. COMPREHENSIVE GENERAL LIABILITY

The comprehensive general liability coverage shall contain no exclusion relative to explosion, collapse, or underground property. The liability limits shall be not less than the following:

Bodily Injury & Property Damage	$ 500,000 each occurrence
	$1,000,000 aggregate

4. UMBRELLA LIABILITY INSURANCE

This insurance shall protect the Bidder against claims in excess of the limits provided under employer's liability, comprehensive automobile liability, and commercial general liability policies. The umbrella policy shall follow the form of the primary insurance, including the application of the primary limits. The liability limits shall not be less than the following:

Bodily Injury & Property Damage	$1,000,000 each occurrence
	$1,000,000 general aggregate

5. ADDITIONAL REQUIREMENTS

The City may require insurance covering a Bidder or subcontractor more or less than the standard requirements set forth herein depending upon the character and extent of the work to be performed by such Bidder or subcontractor.

Insurance as herein required shall be maintained in force until the City releases the Bidder of all obligations under the Contract.

The Bidder shall provide and carry any additional insurance as may be required by special provisions of these specifications.

6. CERTIFICATE OF INSURANCE

Satisfactory certificates of insurance shall be filed with the City prior to starting any work on this Contract**. The certificates shall show the City as an additional insured on all coverage except Workers Compensation. The certificate shall state that thirty (30) days written notice shall be given to the City before any policy is cancelled (strike the "endeavor to" wording often shown on certificate forms). If the bidder cannot have the "endeavor to" language stricken, the bidder may elect to provide a new certificate of insurance every 30 days during the contract. Bidder shall immediately notify the City if there is any reduction of coverage because of revised limits or claims paid which affect the aggregate of any policy.**

CONTRACT AGREEMENT

CONTRACT AGREEMENT

WATER MAIN PROJECT 2020-W-5
PLEASANT VIEW DRIVE CONFLICTS
FOR
CITY OF GRAND ISLAND, NEBRASKA

THIS AGREEMENT made and entered into, by and between

_____
hereinafter called the Contractor, and the City of Grand Island, Nebraska, hereinafter called the City.

WITNESSETH:

THAT, WHEREAS, in accordance with law, the City has caused contract documents to be prepared and an advertisement calling for bids to be published, for construction of **WATER MAIN PROJECT 2020-W-5**; and

WHEREAS, the City, in the manner prescribed by law, has publicly opened, examined, and canvassed the bids submitted, and has determined the aforesaid Contractor to be the lowest responsive bidder, and has duly awarded to the said Contractor a contract therefore, for the sum or sums named in the Contractor's bid, a copy thereof being attached to and made a part of this contract;

NOW, THEREFORE, in consideration of the compensation to be paid to the Contractor and of the mutual agreements herein contained, the parties have agreed and hereby agree, the City for itself and its successors, and the Contractor for itself, himself, or themselves, and its, his, or their successors, as follows:

ARTICLE I. That the Contractor shall (a) furnish all tools, equipment, superintendence, transportation, and other construction materials, services and facilities; (b) furnish, as agent for the City, all materials, supplies and equipment specified and required to be incorporated in and form a permanent part of the completed work; (c) provide and perform all necessary labor; and (d) in a good substantial and workmanlike manner and in accordance with the requirements, stipulations, provisions, and conditions of the contract documents as listed in the attached General Specifications, said documents forming the contract and being as fully a part thereof as if repeated verbatim herein, perform, execute, construct and complete all work included in and covered by the City's official award of this contract to the said Contractor, such award being based on the acceptance by the City of the Contractor's bid;

ARTICLE II. That the City shall pay to the Contractor for the performance of the **water main work** embraced in this Contract and the Contractor will accept as full compensation therefore the sum (subject to adjustment as provided by the Contract) of

_____ Dollars ($_____), for all taxes covered by and included in the Contract; and

_____ Dollars ($_____), for all materials covered by and included in the Contract; and

_____ Dollars ($_____), for all services covered by and included in the Contract; for total amount of

_____ Dollars ($_____), for all work covered by and included in the Contract award and designated in the foregoing Article I; payments thereof to be made in cash or its equivalent in the manner provided in the General Specifications.

ARTICLE III. It is understood and agreed that time is the essence of the Contract. No work shall commence until the Certificate of Insurance and bonds (when required) are approved by the City, the Contract is executed, the erosion control plan has been submitted, and a Notice to Proceed is issued. The Contractor shall coordinate with the City of Grand Island relative to scheduling work. All work, including restoration, shall be completed by **August 21, 2020.**

ARTICLE IV. The Contractor agrees to comply with all applicable State fair labor standards in the execution of this contract as required by Section 73-102, R.R.S. 1943. The Contractor further agrees to comply with the provisions of Section 48-657, R.R.S. 1943, pertaining to contributions to the Unemployment Compensation Fund of the State of Nebraska. During the performance of this contract, the contractor and all subcontractors agree not to discriminate in hiring or any other employment practice on the basis of race, color, religion, sex, national origin, age or disability. The Contractor agrees to comply with all applicable local, State and Federal rules and regulations. The Contractor agrees to maintain a drug-free workplace and to provide a copy of its policy to the City upon request.

IN WITNESS WHEREOF, the parties hereto have executed this Contract Agreement.

Contractor _____

By _____ Date _____

Title _____

CITY OF GRAND ISLAND, NEBRASKA,

By _____ Date _____
Mayor

Attest: _____ Date _____
City Clerk

The contract and bond are in due form according to law and are hereby approved.

_____ Date _____
Attorney for the City

DIVISION 1-A
SPECIAL PROVISIONS

WATER MAIN PROJECT 2020-W-5

DIVISION IA – SPECIAL PROVISIONS

WATER MAIN PROJECT 2020-W-5
PLEASANT VIEW DRIVE CONFLICTS
FOR
CITY OF GRAND ISLAND, NEBRASKA

SECTION 100 – GENERAL

100.01 Description of Work. The work to be performed under the provisions of these Contract documents includes, but is not limited to: furnishing all materials, equipment, labor, and appurtenances involved with the complete installation of Water Main Project 2020-W-5, FOB the City of Grand Island, Nebraska.

The work to be performed under this contract is located in the City of Grand Island within the intersections of Pleasant View Drive and Phoenix Avenue and Pleasant View Drive and Delaware Avenue.

Refer to the plans for exact location and alignment.

100.02 Time Frame. No work shall commence until the Certificate of Insurance and bonds (when required) are approved by the City, the Contract is executed, and a Notice to Proceed is issued. The Contractor shall coordinate with the City of Grand Island relative to scheduling work. All work, including restoration, shall be completed by **August 21, 2020.**

100.03 Specifications and Standard Plan Drawings. All Divisions of the City of Grand Island Specifications and Standard Plan Drawings shall be considered a part of this Contract, whether or not attached into these contract documents, and it shall be the Contractor's responsibility to comply with all requirements thereof.

No attempt has been made in these specifications to segregate work to be performed by any trade or subcontractor. Any segregation between the trades or crafts will be solely a matter for agreement between the Contractor and their employees or their subcontractors. The specifications as a whole will govern construction of the entire work. The applicable provisions whereof will govern work to be performed under each section.

100.04 Pre-Construction Conference. As soon as practical after the Contract is awarded, a pre-construction conference shall be scheduled with the Contractor. The purpose of the conference is to discuss: the project plans and specifications; any unusual conditions; erosion controls; the Contractor's plan and schedule of operation; material; maintenance of traffic and access; and other items that will result in a complete job.

A minimum of five (5) business days in advance of the scheduled pre-construction conference, the Contractor shall be required to submit for review by the Utilities Department:

- A written construction schedule. The Contractor shall be responsible for notifying the property owners and area residents of the impending scheduled activities. If the schedule fails to reflect actual work progress, a revised schedule shall be promptly submitted to the Utilities Department;
- A list of Contractor's key personnel, including any subcontractors, and their qualifications, experience, and cell phone contact numbers;
- Material manufacturer's standard data sheets;
- An environmental protection plan;
- An emergency procedure plan, including a list of the appropriate governmental agencies to be notified.

No materials shall be furnished, nor any work started, before the required submittals have been reviewed and accepted by the Utilities Department.

100.05 Sufficient People and Equipment. It is the intent of these specifications that the Contractor has sufficient people and equipment on the job site capable of completing the job as specified. The Contractor must demonstrate this capability to the satisfaction of the Utilities Department. If at any time during the performance of the work, the Contractor's progress on any phase of the work shall fall behind that necessary to enable the Contractor to complete it in accordance with the date or calendar days set out in the bid, the Contractor, at no extra expense to the City, shall take such action as necessary to meet those completion dates including, but not limited to, working additional or longer shifts and employing more labor and equipment and/or to increase the efficiency of, improve the character of, augment the number of, or to substitute new tools, plant or equipment of the Contractor as the case might be so as to secure the quality of work required.

100.06 Relations with Other Contractors. The Contractor shall cooperate with other contractors and City crews performing work in the vicinity of this Contract; and shall conduct their operations to minimize interference with the work of such contractors.

Any difference or conflict, which may arise between the Contractor and other contractors or crews, shall be resolved as determined by the City. If the work is delayed because of any acts or omissions of any other contractor, the Contractor shall have no claim against the City.

100.07 Protection of Property and Utility Lines. All property and structures shall be protected unless their removal is shown on the Contract drawings or authorized by the City.

Existing utility installations (such as water mains, gas mains, sewers, communication lines and cables, power lines, fiber optic cables, and buried structures) in the vicinity of

the work are to be checked by the Contractor. The Contractor shall be solely responsible for locating all existing utility installations.

The Contractor shall proceed with caution in the excavation and preparation of the work so that the exact location of all such utilities, both known and unknown may be determined, and the Contractor shall be held responsible for the repair of such utilities when broken or otherwise damaged. All such utilities shall be accurately located, including hand excavating by the Contractor as required, as incidental to the Contract and performed prior to machine excavation in the vicinity.

Any delay, additional work, or extra cost to the Contractor caused by existing installations shall not constitute a claim for extra work, additional payment or damages.

100.07.1 Power Lines. There are existing energized high-voltage electric power lines in the work area for this Contract. The Contractor shall use extreme caution such that personal safety is not jeopardized, and electric continuity is maintained. Due to soil conditions and proximity, all poles and underground cables shall be supported during excavation, properly backfilled and compacted to protect from damage.

Any time the Contractor, sub-contractor, or their employees, are working near overhead or underground power line, they will be required to comply with the Grand Island Electric Utility Department's "Recloser Policy." The policy statement and inspection forms are attached in the Appendix.

100.08 Emergency Response. The Contractor shall be responsible for initiating, maintaining, and supervising all safety precautions and programs for their employees in order to respond rapidly and successfully to an emergency situation. The Contractor's personnel must know the steps that need to be followed before, during, and after they occur. This includes the roles and responsibilities of the different responding agencies, the location and availability of response resources, the process for conducting the response, and other actions as necessary.

If a hazardous situation is detected, the Contractor shall notify the appropriate police, fire, and/or other first response team as necessary to mitigate the hazard. Additionally, all such incidents shall be reported immediately to the Phelps Control Center, (308) 385-5465. The Contractor shall document such incidents and provide a written report to the Utilities' Project Inspector.

100.09 Partial Payments. Partial payments will be made upon request from the Contractor. Requests may be submitted once a month. Payments will be made after approval at regularly scheduled City Council meetings.

Request will be based on amount of work executed in an approved manner. No materials-on-hand payment will be made for any items on this project.

100.10 Project Bacteriological Analysis. Two sets of consecutive samples shall be taken for bacteriological analysis twenty-four (24) hours apart. Heterotrophic Plate Count samples will no longer be collected. Refer to City of Grand Island Specifications, Division VI, Sec. 32.10

100.11 Revised Project Charges. There will be no charge to the contractor for tapping the main. Contractor shall provide the necessary materials to complete the work as shown on the plans. There will be no charge to the contractor for the first chlorination and first round of bacteriological sampling of each individual phase of piping. Any subsequent chlorination and sampling shall be at the contractor's expense as per Division VI of the City of Grand Island Specifications.

SECTION 200 -- TRAFFIC AND ACCESS

200.01 General. The contractor shall provide the means for safe vehicular traffic on existing roads, streets, or highway during the Contractor's performance of work. The Contractor shall keep such roads, streets, or highway open to all traffic and shall provide such maintenance as may be required to accommodate traffic. The Contractor shall furnish traffic control; erect, and maintain barricades, warning signs, flag persons, and other traffic control devices in conformity with the Manual of Uniform Traffic Control Devices.

200.02 Notice of Street Closing. When it becomes necessary to close any portion of a street during the execution of this work, the Contractor shall notify the Engineering Division of the Grand Island Public Works Department (308) 385-5444, ext. 260, at least seventy-two (72) hours in advance.

When it becomes necessary to close any private driveway or parking area during the execution of this work, the Contractor shall make arrangements with the affected property management, at least five (5) business days in advance.

200.03 Temporary Traffic Control. Part VI of the Manual of Uniform Traffic Control Devices (MUTCD) is the national standard for work zone traffic control (WZTC). Any crews, contractors, utility companies, or any other person, firm or corporation performing work, shall install and maintain temporary traffic control (TTC) in accordance with the current version adopted by the City of Grand Island.

The Director of Public Works or their authorized representative shall have the authority to direct corrective actions not in compliance with the MUTCD and these provisions. Approval of permits to occupy public right-of-way may be contingent upon evidence of capability to provide, install, and maintain traffic control devices in accordance with the MUTCD and these provisions.

The individual responsible for installing and maintaining the TTC shall provide telephone numbers of personnel who will be available 24 hours per day, seven days per week. These individuals shall be responsible for repair, correction, replacement, and

maintenance of the traffic control devices. These individuals shall perform inspections of the TTC at the site a minimum of twice during the day and once during the night every day until the work is completed and the right-of-way is cleared.

200.03.1 Barricades and Warning Signs. The Contractor shall be responsible for all barricades, warning signs, flares or flashing lights adjacent to all work areas and/or coordination of any required detours. Placement and use of reflectorized materials, etc. shall be according to the Manual of Uniform Traffic Control Devices (MUTCD) and all revisions thereto published under the direction of the Federal Highway Administration.

In situations where sight distance is limited, or where other safety conditions dictate, the Contractor shall provide additional means of controlling traffic, including but not limited to furnishing flaggers. Flaggers shall be properly attired with vest, head gear and stop/slow paddles, and used according to MUTCD flagging procedures. No separate payment shall be made for the use of flaggers and they shall be considered inclusive for traffic control.

200.04 Site Access. The Contractor shall fully cooperate with residential property owners, emergency departments, agencies or parties involved with delivery of mail or packages, and the collection and removal of trash and garbage. The Contractor shall coordinate construction operations so existing schedules for such activities shall be maintained.

SECTION 300 -- WORK SITE PROTECTION

300.01 Work Area. The Contractor shall be responsible for furnishing and maintaining all necessary safety equipment (such as temporary fences, barricades barriers, signs, warning light and guards) and to provide adequate protection of persons property, supplies, materials, and equipment. All excavations shall be properly enclosed and protected.

Good housekeeping is essential and shall be practiced throughout the construction period. The Contractor and their employees shall maintain a clean and safe work site free from trash and debris. The Contractor shall abate dust nuisance by sweeping, or other means as necessary, to keep paved areas acceptably cleaned until such time as restoration is completed. Construction activities which result in mud on hard surfaced areas will not be permitted.

Due care shall be taken in placing construction tools, equipment, materials and supplies so as to cause the least possible damage to the property. Pedestrian and vehicular traffic shall be protected from work activities, equipment, and material stockpiles.

Following completion of the project, all materials, trash, and debris shall be removed by the Contractor. No additional compensation shall be allowed for site cleanup.

300.02 Personal Protective Equipment. During all phases of the project, all personnel working within the construction limits shall be suitably dressed to perform their duties safely and in such a manner that will not interfere with their vision, hearing, and use of hands and feet. As a minimum, all workers shall be required to wear:

- Hard hats that meet the American National Standard Institute (ANSI) Z89.1-latest revision;
- High-visibility and reflective personal protective safety clothing. Such clothing shall be suitable during both daytime and nighttime usage and meet the performance Class 2 or Class 3 requirements if ANSI/ISEA 107-2004 publication entitled “American National Standards for High-Visibility Safety Apparel and Headwear”.

300.03 Staging Area. The Contractor will be restricted to an area for material storage and staging of construction activities for the duration of this project. When not in use, all construction material, equipment, etc. shall be stored in this area.

All supplies, materials and/or equipment shall be properly protected and enclosed by fences or barricades and not limit nor interfere with access and safety.

Upon completion of the project, the Contractor shall restore the area to equal or better than original condition. Restoration shall be subsidiary to the project.

300.03.1 Temporary Site Fencing. All storage and staging areas shall be enclosed with temporary fencing. As a minimum, all temporary site fencing material shall be a commercial grade, heavy-duty plastic mesh design, and highly visible orange in color. The fence shall be a minimum of four (4) feet in height with a smooth top and bottom for safety and aesthetic appeal. The fence shall be installed plumb for the entire length, strung taut between posts, and properly maintained during the entire project.

300.04 Sanitation. The Contractor shall provide and maintain enclosed toilets for the use of personnel engaged in the work area. These accommodations shall be maintained in a neat and sanitary condition. They shall also comply with all applicable laws, ordinances, and regulations pertaining to public health and sanitation of dwellings and camps.

300.05 Storage of Equipment and Materials in Right-of-Way. Construction materials shall not be stored within the public right-of-way. However, materials waiting to be installed during the construction work day may be placed within the right-of-way, provided they do not limit nor interfere with public access and safety. All materials not installed by the end of the work day shall be removed and stored in the designated location by the Contractor at their expense.

Excavated materials not required for immediate backfill operations shall not be stored within the public right-of-way. All excavations shall be properly backfilled and barricaded at the end of each work day and excess materials shall be removed from the site.

Construction equipment shall not be stored within the public right-of-way before its actual use or after it is no longer needed. Additional time for assembly, disassembly, or repair of equipment may be authorized by the Utilities Department.

SECTION 400 – EXCAVATION, REMOVALS, AND BACKFILL

400.01 Soils investigation. The Contractor is responsible for designing any excavation slopes or temporary shoring. The design should comply with all federal, Nebraska and local regulations, including OSHA Health and Safety Standards for Excavations, 29 CFR Part 1926.

400.02 Site Investigation. The Contractor shall determine the types and locations of surface and subsurface utilities and materials, soil types, groundwater, and other environmental factors and shall determine their effect on the pipe installation. All site investigations required shall be the responsibility of the Contractor. If utilities of unknown depth or other obstructions will require grade or alignment deviations from the plans, the grade or alignment may be adjusted with the prior approval of the Utilities Department.

400.03 Topsoil. Topsoil shall be salvaged from areas requiring excavations and replaced after construction. Topsoil shall consist of friable surface soil up to one (1) foot in depth, reasonably free of grass, roots, weeds, sticks, stones, and other foreign materials.

400.04 Salvage and Stockpile. After the site has been cleared and grubbed, the topsoil shall be removed to the depth of one (1) foot from the designated areas and shall be stockpiled. Objectionable materials encountered during excavation shall be removed from the construction site. Additional materials required to re-establish grade shall be supplied by the Contractor.

400.05 Spreading. Spreading shall not be done when the ground or topsoil is frozen, excessively wet or otherwise in the condition detrimental to the work. Surfaces designated to be covered shall be lightly scarified just prior to the spreading operation. Where compacted fills are designated to be covered by topsoil, the topsoil shall be placed concurrently with the fill and shall be bonded to the compacted fill with the compacting equipment.

After placement is completed, the surface of the topsoil shall be restored to the grade prior to construction

400.06 Excavations. All excavations should be sloped back, shored, or shielded for protection of workers. The Contractor is responsible for designing any excavation slopes or temporary shoring. The design should comply with all federal, Nebraska and local regulations, including OSHA Health and Safety Standards for Excavations, 29 CFR Part 1926.

400.07 Excavation of Poor Soils. Where wet, soft, or frozen materials; asphalt, concrete or bricks; cinders, ashes, refuse, trash, organic material or other deleterious excavated substances are encountered, the material shall be rejected, hauled away, and disposed of by the Contractor. All such excavated materials shall be removed from the job site and disposed of properly. If the material is disposed of on private property, prior written permission shall be obtained from the owner of the property, and a copy submitted to the City's designated representative. All materials must be removed in a timely manner.

The Contractor shall over excavate the unsuitable material and remove it to a minimum depth of one (1) foot below the plan sub-grade. The over excavated volume shall be replaced with clean compacted sand, free from clay and organics, to re-establish the sub-grade.

400.07.1 Backfill in Poor Soils. The following section shall be used in addition to Division VI – Water Mains, Section 32.13. Where additional bedding and backfill materials are required to replace poor soils, clean sand, free from clay and organics, shall be compacted around and under the pipe. Backfill materials shall be deposited in the trench for its full width on each side of the pipe fittings and appurtenances simultaneously.

From the top of the pipe, to a depth of twelve (12) inches above the top of the pipe, the trench shall be backfilled and compacted. Special care shall be used in placing this portion of backfill so as to avoid disturbing the pipe. The remainder of the trench shall be backfilled and compacted per Section 36.13 and Section 36.13.1.

400.07.2 Basis of Payment. When authorized by the Utilities Department, removal and replacement of unsuitable excavated and backfill materials shall be measured and added to the established quantities as an Extra Work item, in conjunction with General Specifications, Section 9.04, titled "Payment for Extra Work."

400.08 Compaction Testing. Density tests will be required for each twelve (12) inch vertical lift of compacted material placed at a frequency of not greater than 300 lineal feet of trench. The Contractor shall be required to hire an independent soil testing laboratory to test separately each lift for density and certify that each and every lift was properly compacted: Turf areas – 88%; Roadways and driveways – 95%

Density test results shall be submitted to the City before acceptance of the project. The Contractor shall maintain the trench backfill for one (1) year from the date of acceptance of the project by the City.

400.09 Protection of Property and Surface Structures. All property and structures shall be protected unless their removal is shown on the Contract drawings or authorized by the City engineer.

400.10 Miscellaneous Removal Items. It shall be the Contractor's responsibility to notify the property owners within the project area, a minimum of five (5) days ahead of

construction, so the property owners may remove small trees, bushes, shrubs, fences, sod, sprinkler systems, etc., from the construction limits if they wish to save them.

SECTION 500 – WATERWORKS INSTALLATION

500.01 Baselines, Benchmarks, and Control Points. All water main work shall be laid out from existing section corners, benchmarks, and control points established by the Utilities Department. The Contractor shall be responsible for executing the work to the lines and grades established. It shall be the Contractor's responsibility to maintain and preserve all baselines and control points. If such marks are destroyed by the Contractor without authorization by the Utilities Department, all such lines, points, monuments and stakes shall be re-established by the Utilities Department, and the expense charged to the Contractor.

500.02 Property Corners. It shall be the Contractor's responsibility to protect existing property corners and government surveying monuments. If property corners are disturbed or destroyed during construction, it shall be the Contractor's obligation to employ a licensed land surveyor to replace those damaged or destroyed corners. No extra or additional payment will be made for restoration of property corners.

500.03 Limits of Construction. The Contractor shall confine all work activities to the public street right-of-way, utility easements and project staging area. Failure to restrict construction activities to the project limits may result in damage to private property and bad public relations. Any property damage done by the Contractor beyond these limits shall be immediately repaired at the Contractor's expense.

500.04 Water Main Gaskets. All pipe and fitting gaskets shall be vulcanized styrene butadiene rubber (SBR) and shall conform to the "American National Standard for Rubber-Gasket Joints for Ductile-Iron Pressure Pipe and Fittings, ANSI/AWWA C111 /A21.11 and subsequent revisions. All necessary gaskets and gasket lubricants shall be the type recommended and supplied by the pipe manufacturer.

500.05 Water Main Pipe Cover. The following section shall be used in addition to Grand Island Specifications Division VI Water Mains, Section 32.01. It is intended that all water main pipe fittings, service lines, and appurtenances shall be installed to the alignment and grade shown on plans. The elevation of the piping may vary depending upon existing obstructions and proposed improvements encountered during construction. Any deviations shall have the approval of the Utilities Department. Where additional depth is required to clear encountered or proposed grade interference, the additional excavation and backfill shall be incidental to the project and not claim for extra work.

500.06 Location of City Supplied Hydrants. The fire hydrant with alpha connection will be supplied by the City and installed by the Contractor. Hydrant will be available to the Contractor for pick up at the Water Department warehouse located at 370 N. Pine

Street. The Contractor shall notify the Water Department (308-385-5436) at least twenty-four (24) hours in advance to make arrangements for material pick up.

500.07 Fire Hydrant Testing. During such times when fire hydrants have been installed, yet not accepted and approved for use, they shall be covered, except during testing, indicating they are not in service. Hydrant bags shall be made of a minimum 4 Mil. Polypropylene material, orange in color, printed with the words “Not in Service” and supplied with tie-down straps. Bags shall be furnished by the City and installed and maintained by the Contractor.

500.08 Water System Shut-Down. When specific activities are deemed that a section of the existing water main needs to be isolated and shut-down, the Contractor shall notify the Utilities Department representative and the Grand Island Water Department (308-385-5436) a minimum of seventy-two (72) hours in advance. All related work to accomplish the shut-down shall be scheduled and coordinated with the Grand Island Water Department.

500.09 Polyethylene Encasement. This section shall be used in conjunction with City of Grand Island Specification Division VI Water Mains, Section 34 – Polyethylene Encasement; and Standard Plan 155. The Contractor shall furnish complete all materials and field apply polyethylene encasement to all ductile-iron carrier pipe, fittings, valves, and other appurtenances associated with the piping system.

500.10 Water Main Abandonment in Manholes. The existing 6” diameter water main traverses through the existing storm sewer manholes in two intersection locations: Pleasant View Drive and Phoenix Avenue; and Pleasant View Drive and Delaware Avenue. At each of the locations, or as otherwise directed by the City Utilities Department, the Contractor shall remove and abandon the water main and rehabilitate the manhole as required.

The water main shall be removed from within the manhole without disrupting the integrity of the manhole. The water main piping shall be cut as near as practical where it protrudes from the inside wall of the manhole. The piping shall be properly abandoned, plugged, and sealed to prevent infiltration of water, soils or other debris.

The pipe plug shall consist of a fast setting, non-metallic, shrink-resistant cement repair product approved for use in below grade applications to make repairs or to stop flowing water leaks in concrete and masonry structures. Completely fill the end of the pipe with concrete. Force the concrete into the end of the pipe for a minimum distance of eighteen (18) inches

The entire annular space between the outside of the abandoned water main and the inside manhole wall shall be grouted. Grout, where required, shall consist of equal parts of sand and cement with sufficient water to produce the proper consistency.

During the abandonment and rehabilitation process, the Contractor shall protect the manhole to withstand the forces generated by the equipment, water, and air pressures used to complete the abandonment and rehabilitation installation.

Debris from the abandonment and rehabilitation process shall not be allowed to enter the sewer system. The Contractor shall furnish, install, maintain, and remove debris collection devices while maintaining sewer flows. The Contractor shall remove and properly dispose of all debris collected during the water main abandonment and manhole rehabilitation.

500.10.1 Measurement and Payment. Abandonment of the water main at manhole locations shall be per the Contract unit price complete. The unit price shall be full compensation for furnishing all labor, materials, tools, equipment, appurtenances, and incidentals as required for the complete removal and abandonment of the water main and rehabilitation of the manhole.

SECTION 600 – RESTORATION

600.01 Hard Surfaced Areas. Hard surfaced roadways, driveways or parking areas in conflict with the water main to be installed, shall be removed and replaced by the Contractor. Replacement shall be equal to or better than original. All concrete pavement restoration shall conform to Division II - Portland Cement Concrete Pavement of the City of Grand Island standard specifications. All asphaltic pavement shall conform to Division IV - Asphaltic Concrete Surface Course of the standard specifications for the City of Grand Island.

Within two (2) weeks after starting work in an area, the Contractor shall commence restoration activities to minimize disruptions and inconvenience during construction. Restoration shall include, but not limited to: grading, replacement of sidewalks, driveways and roadways.

600.01.1 Cold Weather Concreting. When average daily temperatures are below 40°F (4.5°C) for more than three consecutive days, the Contractor shall use approved practices and procedures that will assure that placed concrete will be sufficiently strong and durable to fully meet design requirements. The use of insulating coverings, accelerating admixtures, high-early strength cement, or additional cement may be used to develop the level of strength required. All such methods shall fully conform to the American Concrete Institute's "Recommended Practice for Cold Weather Concreting."

There shall be no additional payment if such cold weather techniques are required.

600.02 Restoration – Roadways. This work shall consist of repairing roadways and/or parking areas at the locations shown on the plans or as designated by the City. The work shall include removal, disposal, preparation of the repair area, and furnishing, placing, finishing and curing for the repairs.

- Concrete surfacing shall be removals shall be along existing joints and removed for the full depth of the slab repair area.
- Asphalt surfacing removals shall be made by cutting a full depth saw joint to provide a straight, smooth edge where the new surfacing adjoins the existing surfacing.

The following shall be used in addition to City Specifications, Division II, Section 11.01. The thickness of the new concrete pavement shall match existing adjacent pavement or be a minimum six (6) inches, whichever is greater, or as deemed appropriate by Utilities Department representative. When required by the plans or field conditions warrant and as directed by the Utilities Department representative, pavement repair shall be made with Type 47B-HE-3,500 (high early) Portland Concrete Pavement, as specified in the Nebraska Department of Roads (2007 Version) Standard Specifications Division 600-Portland Cement Concrete Pavements, Section 605- Concrete Pavement Repair.

When it becomes necessary to close any portion of the public roadway during the execution to the project, the Contractor shall notify the Engineering Division of the Grand Island Public Works Department (308)385-5444, ext. 260, at least seventy-two (72) hours in advance.

600.03 Driveway and Sidewalk Restoration. Replacement of concrete driveways and concrete sidewalks shall be as per Division III – Curb and Gutter, Sidewalks, and Driveways of the standard specifications for the City of Grand Island.

600.03.1 Sidewalk Ramps. Sidewalk replacements shall follow the latest Americans with Disabilities Act (ADA) requirements and be constructed using detectable warning plates with a truncated dome design. Plates shall provide a permanent, maintenance free installation that will effectively warn the visually impaired.

600.03.2 Detectable Warning Plates. Sidewalk curb ramps shall incorporate detectable warning plates with a truncated dome design. Plates shall provide a permanent, maintenance free installation, which will effectively warn the visually impaired.

Detectable warning plates shall be pressed (wet-set) into freshly poured concrete and firmly secured by high-strength anchors. Plates shall as a minimum be: Glass fiber polymer concrete panels, powder coat painted brick red; utilizing vent holes to release air for maximum concrete contact and not trap air or water when installed; and incorporate an all-weather non-skid surface and textured tread for slip resistance.

Prior to ordering detector plates, the Contractor shall submit to the Grand Island Utilities Department for approval, the manufacturer's standard data sheets on materials proposed to be furnished.

600.04 Restoration - Non-Hard Surfaces. All non-hard surfaced and turf areas disturbed by excavation, backfill, and construction operations shall be fine graded, and hand dressed as required to restore the terrain to its original shape. The Contractor

shall leave the area in such a manner as to allow drainage without ponding, free of debris, and shall protect from erosion.

600.05 Sodding. For established residential lawns, public easements and right-of-way, or as otherwise directed by the City, restoration of turf areas shall comply with the following amended requirements in accordance with the State of Nebraska Department of Roads Standard Specifications.

All materials furnished shall be identified and tagged with the botanical genus, species, and common name or variety.

600.06 Time of Sodding. Sodding shall not be performed when the ground is frozen, or weather conditions are not favorable for growth as determined by the City.

600.07 Sod Requirements. Sod shall be from approved field sources. The sod shall be a first-class representation of normal species or varieties of cool season grasses for low maintenance areas. All materials furnished shall be identified and tagged with the botanical genus, species, and common name or variety.

The sod shall be an approved mixture of tall fescues and perennial ryegrasses and shall have been grown from culturally planted seed specifically for the production of sod and shall have been maintained by acceptable methods for the production of sod. The sod shall be mowed and raked to remove stems, sticks, and clippings prior to cutting. The sod shall be cut to a depth of approximately three-quarters of an inch. Sod shall be free of noxious weeds and relatively free from all other weeds. Extreme care shall be taken in cutting, handling, transporting and laying the sod to avoid unnecessary damage to and loss of earth from the roots of the sod. Sod shall not have dry or dead edges.

600.08 Soil Preparation. Areas that are to be sodded shall be clear of debris and dead vegetation prior to the preparation of the sod bed. The sod shall not have a crusted appearance. All erosion shall be filled prior to laying the sod. All loose earth shall be firmed prior to laying the sod.

600.09 Fertilizer. Fertilizers shall not be applied.

600.10 Laying the Sod. Sod will be transported to the site within 24-hours from the time it is cut. The Contractor shall exercise care at all times to retain the native soil on the sod roots. Dry and/or frozen sod will not be acceptable. The sod bed shall be thoroughly dampened prior to placing sod.

The sod shall be laid over the area in strips edge to edge in a compact mass to produce tight joints. The sod shall be laid approximately one (1) inch below adjoining ground surfaces and flush with adjoining sod. At the end of walks, drives, and curbs the sod will be laid to the same finish grade as the abutting surfaces.

Sod shall be rolled one time with an approved sod roller immediately after its placement to provide an even surface and eliminate air pockets. The sod shall be watered immediately after it is placed.

600.11 Watering. The Contractor will be responsible for watering sodded areas a minimum of once daily for a period of fourteen (14) days following the initial sodding operation.

600.12 Acceptance. At the end of the fourteen (14) day establishment period, the Contractor shall request a sodding inspection by the City. Any portion of the sodded area deemed by the City to be thin, weak or dead or otherwise not in good growing condition, will be removed and replaced by the Contractor with fresh live sod.

All replaced sod will begin again the fourteen (14) days of watering cycle. No partial acceptance will be made.

600.13 Sprinkler Irrigation Systems. The Contractor shall be responsible for repairing any sprinkler irrigation systems which are damaged during construction of the project. Irrigation system repairs shall be made for any component which is damaged due to construction activities, including, but not limited to: sprinkler heads, piping, valves, control wires, and controllers. Damaged materials shall be replaced with new materials of the same type, make, and model unless otherwise directed by the City. Repairing sprinkler systems will not be paid for separately, but shall be considered subsidiary to the other items in the Bid.

SECTION 700 – DEWATERING

700.01 General. When required, this section will be used in conjunction with Division VI, Section 36, Dewatering. It shall be the Contractor's responsibility for devising and operating a construction dewatering system.

700.02 Discharge Permit. The City of Grand Island has a Construction Dewatering Permit from the State of Nebraska Department of Environmental Control. A copy of permit number NEG671000-2017 is contained in the Appendix.

700.03 Discharge Water. All dewatering discharge water shall be conveyed to locations as previously approved by the City. It will be the Contractor's responsibility to make driveway and street crossings in such a manner as to not interfere with normal use. The Contractor will not be allowed to utilize the street pavement gutter line for open conveyance of discharge water.

SECTION 800 – TEMPORARY EROSION CONTROL

800.01 Storm Water Discharges. When required, the Contractor shall fully comply with all Phase II Construction Requirements.

Phase II of the storm water program applies to all construction activities disturbing one or more acres of land, or if the site is less than one acre but part of a larger common

plan of development (such as a large subdivision). These sites must obtain an NPDES permit before any earthmoving activities begin. The NDEQ may require construction sites disturbing less than one acre of land to obtain a storm water discharge permit if such activities would adversely affect water quality.

800.02 Best Management Practices (BMPs). The Contractor shall implement and maintain such BMPs as relevant to conduct the operations and maintain the work so that adequate drainage and erosion control are in place at all times. Techniques will be employed for wind erosion control, sediment control, non-storm water control, and waste management and materials pollution; including preventing petroleum products, chemicals, harmful materials, construction debris, and excessive suspended solids from entering waterways.

The Contractor shall follow guidelines established in City of Grand Island City Code; Chapter 40, Storm Water Management. The utility construction defined in 40.11, A thru D; shall comply with guidelines listed as disturbing LESS than one (1) acre. The Contractor shall exercise every reasonable precaution to protect channels, storm drains, and bodies of water from pollution. It shall conduct and schedule operations so as to minimize or avoid muddying and silting of said channels, drains, and waters. Water pollution control work shall consist of constructing those facilities which may be required to provide prevention, control, and abatement of water pollution.

The Contractor will install and maintain Best Management Practices (BMPs) to include silt fence, construction rock entrances or silt checks if needed. A uniform perennial vegetative cover with a minimum density of 70 percent of the native background vegetative cover is required for final stabilization.

The City may perform periodic drive-by inspections and provide the Contractor any findings, but the contractor will be responsible for the routine/rain fall event inspections. Separate payment will NOT be made for installation of inlet protection as shown on the plans or any other Best Management Practices outlined above. All shall be paid for in the Sediment and Erosion Control pay item.

Curb Inlet Protector shall be SWP-CI “Big Red” by A.S.P. Enterprises or approved equal.

800.03 Drainage and Erosion Controls. The Contractor shall be responsible for evaluating the construction site and determining the need to prevent soil erosion and track-off of material from the project site, control dust, and control the discharge of sediment to the storm sewer system. Such measures may include but not limited to, taking temporary measures and/or installing permanent erosion control structures such as sediment traps, silt fence, ditch checks, etc. Such features shall be incorporated into the project at the earliest practicable time and shall be properly maintained by the Contractor.

The Contractor shall exercise every reasonable precaution throughout the project to provide adequate drainage and erosion controls on the project site and adjacent properties. Construction of drainage facilities, as well as performance of other Contract work which will contribute to the control of siltation, shall be carried out in conjunction with other project operations, or as soon thereafter as is practicable.

All erosion resulting from the Contractor's operations and the elements must be corrected by the Contractor at no additional cost to the City. The Contractor shall conduct all construction activities so as to avoid soil erosion. Each day, areas shall be protected so that storm runoff will not erode soil.

APPENDIX

WATER MAIN PROJECT 2020-W-5
CONSTRUCTION PLANS

DIVISION 1-A
SPECIAL PROVISIONS

WATER MAIN PROJECT 2020-W-5

DIVISION IA – SPECIAL PROVISIONS

WATER MAIN PROJECT 2020-W-5
PLEASANT VIEW DRIVE CONFLICTS
FOR
CITY OF GRAND ISLAND, NEBRASKA

SECTION 100 – GENERAL

100.01 Description of Work. The work to be performed under the provisions of these Contract documents includes, but is not limited to: furnishing all materials, equipment, labor, and appurtenances involved with the complete installation of Water Main Project 2020-W-5, FOB the City of Grand Island, Nebraska.

The work to be performed under this contract is located in the City of Grand Island within the intersections of Pleasant View Drive and Phoenix Avenue and Pleasant View Drive and Delaware Avenue.

Refer to the plans for exact location and alignment.

100.02 Time Frame. No work shall commence until the Certificate of Insurance and bonds (when required) are approved by the City, the Contract is executed, and a Notice to Proceed is issued. The Contractor shall coordinate with the City of Grand Island relative to scheduling work. All work, including restoration, shall be completed by **August 21, 2020.**

100.03 Specifications and Standard Plan Drawings. All Divisions of the City of Grand Island Specifications and Standard Plan Drawings shall be considered a part of this Contract, whether or not attached into these contract documents, and it shall be the Contractor's responsibility to comply with all requirements thereof.

No attempt has been made in these specifications to segregate work to be performed by any trade or subcontractor. Any segregation between the trades or crafts will be solely a matter for agreement between the Contractor and their employees or their subcontractors. The specifications as a whole will govern construction of the entire work. The applicable provisions whereof will govern work to be performed under each section.

100.04 Pre-Construction Conference. As soon as practical after the Contract is awarded, a pre-construction conference shall be scheduled with the Contractor. The purpose of the conference is to discuss: the project plans and specifications; any unusual conditions; erosion controls; the Contractor's plan and schedule of operation; material; maintenance of traffic and access; and other items that will result in a complete job.

A minimum of five (5) business days in advance of the scheduled pre-construction conference, the Contractor shall be required to submit for review by the Utilities Department:

- A written construction schedule. The Contractor shall be responsible for notifying the property owners and area residents of the impending scheduled activities. If the schedule fails to reflect actual work progress, a revised schedule shall be promptly submitted to the Utilities Department;
- A list of Contractor's key personnel, including any subcontractors, and their qualifications, experience, and cell phone contact numbers;
- Material manufacturer's standard data sheets;
- An environmental protection plan;
- An emergency procedure plan, including a list of the appropriate governmental agencies to be notified.

No materials shall be furnished, nor any work started, before the required submittals have been reviewed and accepted by the Utilities Department.

100.05 Sufficient People and Equipment. It is the intent of these specifications that the Contractor has sufficient people and equipment on the job site capable of completing the job as specified. The Contractor must demonstrate this capability to the satisfaction of the Utilities Department. If at any time during the performance of the work, the Contractor's progress on any phase of the work shall fall behind that necessary to enable the Contractor to complete it in accordance with the date or calendar days set out in the bid, the Contractor, at no extra expense to the City, shall take such action as necessary to meet those completion dates including, but not limited to, working additional or longer shifts and employing more labor and equipment and/or to increase the efficiency of, improve the character of, augment the number of, or to substitute new tools, plant or equipment of the Contractor as the case might be so as to secure the quality of work required.

100.06 Relations with Other Contractors. The Contractor shall cooperate with other contractors and City crews performing work in the vicinity of this Contract; and shall conduct their operations to minimize interference with the work of such contractors.

Any difference or conflict, which may arise between the Contractor and other contractors or crews, shall be resolved as determined by the City. If the work is delayed because of any acts or omissions of any other contractor, the Contractor shall have no claim against the City.

100.07 Protection of Property and Utility Lines. All property and structures shall be protected unless their removal is shown on the Contract drawings or authorized by the City.

Existing utility installations (such as water mains, gas mains, sewers, communication lines and cables, power lines, fiber optic cables, and buried structures) in the vicinity of

the work are to be checked by the Contractor. The Contractor shall be solely responsible for locating all existing utility installations.

The Contractor shall proceed with caution in the excavation and preparation of the work so that the exact location of all such utilities, both known and unknown may be determined, and the Contractor shall be held responsible for the repair of such utilities when broken or otherwise damaged. All such utilities shall be accurately located, including hand excavating by the Contractor as required, as incidental to the Contract and performed prior to machine excavation in the vicinity.

Any delay, additional work, or extra cost to the Contractor caused by existing installations shall not constitute a claim for extra work, additional payment or damages.

100.07.1 Power Lines. There are existing energized high-voltage electric power lines in the work area for this Contract. The Contractor shall use extreme caution such that personal safety is not jeopardized, and electric continuity is maintained. Due to soil conditions and proximity, all poles and underground cables shall be supported during excavation, properly backfilled and compacted to protect from damage.

Any time the Contractor, sub-contractor, or their employees, are working near overhead or underground power line, they will be required to comply with the Grand Island Electric Utility Department's "Recloser Policy." The policy statement and inspection forms are attached in the Appendix.

100.08 Emergency Response. The Contractor shall be responsible for initiating, maintaining, and supervising all safety precautions and programs for their employees in order to respond rapidly and successfully to an emergency situation. The Contractor's personnel must know the steps that need to be followed before, during, and after they occur. This includes the roles and responsibilities of the different responding agencies, the location and availability of response resources, the process for conducting the response, and other actions as necessary.

If a hazardous situation is detected, the Contractor shall notify the appropriate police, fire, and/or other first response team as necessary to mitigate the hazard. Additionally, all such incidents shall be reported immediately to the Phelps Control Center, (308) 385-5465. The Contractor shall document such incidents and provide a written report to the Utilities' Project Inspector.

100.09 Partial Payments. Partial payments will be made upon request from the Contractor. Requests may be submitted once a month. Payments will be made after approval at regularly scheduled City Council meetings.

Request will be based on amount of work executed in an approved manner. No materials-on-hand payment will be made for any items on this project.

100.10 Project Bacteriological Analysis. Two sets of consecutive samples shall be taken for bacteriological analysis twenty-four (24) hours apart. Heterotrophic Plate Count samples will no longer be collected. Refer to City of Grand Island Specifications, Division VI, Sec. 32.10

100.11 Revised Project Charges. There will be no charge to the contractor for tapping the main. Contractor shall provide the necessary materials to complete the work as shown on the plans. There will be no charge to the contractor for the first chlorination and first round of bacteriological sampling of each individual phase of piping. Any subsequent chlorination and sampling shall be at the contractor's expense as per Division VI of the City of Grand Island Specifications.

SECTION 200 -- TRAFFIC AND ACCESS

200.01 General. The contractor shall provide the means for safe vehicular traffic on existing roads, streets, or highway during the Contractor's performance of work. The Contractor shall keep such roads, streets, or highway open to all traffic and shall provide such maintenance as may be required to accommodate traffic. The Contractor shall furnish traffic control; erect, and maintain barricades, warning signs, flag persons, and other traffic control devices in conformity with the Manual of Uniform Traffic Control Devices.

200.02 Notice of Street Closing. When it becomes necessary to close any portion of a street during the execution of this work, the Contractor shall notify the Engineering Division of the Grand Island Public Works Department (308) 385-5444, ext. 260, at least seventy-two (72) hours in advance.

When it becomes necessary to close any private driveway or parking area during the execution of this work, the Contractor shall make arrangements with the affected property management, at least five (5) business days in advance.

200.03 Temporary Traffic Control. Part VI of the Manual of Uniform Traffic Control Devices (MUTCD) is the national standard for work zone traffic control (WZTC). Any crews, contractors, utility companies, or any other person, firm or corporation performing work, shall install and maintain temporary traffic control (TTC) in accordance with the current version adopted by the City of Grand Island.

The Director of Public Works or their authorized representative shall have the authority to direct corrective actions not in compliance with the MUTCD and these provisions. Approval of permits to occupy public right-of-way may be contingent upon evidence of capability to provide, install, and maintain traffic control devices in accordance with the MUTCD and these provisions.

The individual responsible for installing and maintaining the TTC shall provide telephone numbers of personnel who will be available 24 hours per day, seven days per week. These individuals shall be responsible for repair, correction, replacement, and

maintenance of the traffic control devices. These individuals shall perform inspections of the TTC at the site a minimum of twice during the day and once during the night every day until the work is completed and the right-of-way is cleared.

200.03.1 Barricades and Warning Signs. The Contractor shall be responsible for all barricades, warning signs, flares or flashing lights adjacent to all work areas and/or coordination of any required detours. Placement and use of reflectorized materials, etc. shall be according to the Manual of Uniform Traffic Control Devices (MUTCD) and all revisions thereto published under the direction of the Federal Highway Administration.

In situations where sight distance is limited, or where other safety conditions dictate, the Contractor shall provide additional means of controlling traffic, including but not limited to furnishing flaggers. Flaggers shall be properly attired with vest, head gear and stop/slow paddles, and used according to MUTCD flagging procedures. No separate payment shall be made for the use of flaggers and they shall be considered inclusive for traffic control.

200.04 Site Access. The Contractor shall fully cooperate with residential property owners, emergency departments, agencies or parties involved with delivery of mail or packages, and the collection and removal of trash and garbage. The Contractor shall coordinate construction operations so existing schedules for such activities shall be maintained.

SECTION 300 -- WORK SITE PROTECTION

300.01 Work Area. The Contractor shall be responsible for furnishing and maintaining all necessary safety equipment (such as temporary fences, barricades barriers, signs, warning light and guards) and to provide adequate protection of persons property, supplies, materials, and equipment. All excavations shall be properly enclosed and protected.

Good housekeeping is essential and shall be practiced throughout the construction period. The Contractor and their employees shall maintain a clean and safe work site free from trash and debris. The Contractor shall abate dust nuisance by sweeping, or other means as necessary, to keep paved areas acceptably cleaned until such time as restoration is completed. Construction activities which result in mud on hard surfaced areas will not be permitted.

Due care shall be taken in placing construction tools, equipment, materials and supplies so as to cause the least possible damage to the property. Pedestrian and vehicular traffic shall be protected from work activities, equipment, and material stockpiles.

Following completion of the project, all materials, trash, and debris shall be removed by the Contractor. No additional compensation shall be allowed for site cleanup.

300.02 Personal Protective Equipment. During all phases of the project, all personnel working within the construction limits shall be suitably dressed to perform their duties safely and in such a manner that will not interfere with their vision, hearing, and use of hands and feet. As a minimum, all workers shall be required to wear:

- Hard hats that meet the American National Standard Institute (ANSI) Z89.1-latest revision;
- High-visibility and reflective personal protective safety clothing. Such clothing shall be suitable during both daytime and nighttime usage and meet the performance Class 2 or Class 3 requirements if ANSI/ISEA 107-2004 publication entitled “American National Standards for High-Visibility Safety Apparel and Headwear”.

300.03 Staging Area. The Contractor will be restricted to an area for material storage and staging of construction activities for the duration of this project. When not in use, all construction material, equipment, etc. shall be stored in this area.

All supplies, materials and/or equipment shall be properly protected and enclosed by fences or barricades and not limit nor interfere with access and safety.

Upon completion of the project, the Contractor shall restore the area to equal or better than original condition. Restoration shall be subsidiary to the project.

300.03.1 Temporary Site Fencing. All storage and staging areas shall be enclosed with temporary fencing. As a minimum, all temporary site fencing material shall be a commercial grade, heavy-duty plastic mesh design, and highly visible orange in color. The fence shall be a minimum of four (4) feet in height with a smooth top and bottom for safety and aesthetic appeal. The fence shall be installed plumb for the entire length, strung taut between posts, and properly maintained during the entire project.

300.04 Sanitation. The Contractor shall provide and maintain enclosed toilets for the use of personnel engaged in the work area. These accommodations shall be maintained in a neat and sanitary condition. They shall also comply with all applicable laws, ordinances, and regulations pertaining to public health and sanitation of dwellings and camps.

300.05 Storage of Equipment and Materials in Right-of-Way. Construction materials shall not be stored within the public right-of-way. However, materials waiting to be installed during the construction work day may be placed within the right-of-way, provided they do not limit nor interfere with public access and safety. All materials not installed by the end of the work day shall be removed and stored in the designated location by the Contractor at their expense.

Excavated materials not required for immediate backfill operations shall not be stored within the public right-of-way. All excavations shall be properly backfilled and barricaded at the end of each work day and excess materials shall be removed from the site.

Construction equipment shall not be stored within the public right-of-way before its actual use or after it is no longer needed. Additional time for assembly, disassembly, or repair of equipment may be authorized by the Utilities Department.

SECTION 400 – EXCAVATION, REMOVALS, AND BACKFILL

400.01 Soils investigation. The Contractor is responsible for designing any excavation slopes or temporary shoring. The design should comply with all federal, Nebraska and local regulations, including OSHA Health and Safety Standards for Excavations, 29 CFR Part 1926.

400.02 Site Investigation. The Contractor shall determine the types and locations of surface and subsurface utilities and materials, soil types, groundwater, and other environmental factors and shall determine their effect on the pipe installation. All site investigations required shall be the responsibility of the Contractor. If utilities of unknown depth or other obstructions will require grade or alignment deviations from the plans, the grade or alignment may be adjusted with the prior approval of the Utilities Department.

400.03 Topsoil. Topsoil shall be salvaged from areas requiring excavations and replaced after construction. Topsoil shall consist of friable surface soil up to one (1) foot in depth, reasonably free of grass, roots, weeds, sticks, stones, and other foreign materials.

400.04 Salvage and Stockpile. After the site has been cleared and grubbed, the topsoil shall be removed to the depth of one (1) foot from the designated areas and shall be stockpiled. Objectionable materials encountered during excavation shall be removed from the construction site. Additional materials required to re-establish grade shall be supplied by the Contractor.

400.05 Spreading. Spreading shall not be done when the ground or topsoil is frozen, excessively wet or otherwise in the condition detrimental to the work. Surfaces designated to be covered shall be lightly scarified just prior to the spreading operation. Where compacted fills are designated to be covered by topsoil, the topsoil shall be placed concurrently with the fill and shall be bonded to the compacted fill with the compacting equipment.

After placement is completed, the surface of the topsoil shall be restored to the grade prior to construction

400.06 Excavations. All excavations should be sloped back, shored, or shielded for protection of workers. The Contractor is responsible for designing any excavation slopes or temporary shoring. The design should comply with all federal, Nebraska and local regulations, including OSHA Health and Safety Standards for Excavations, 29 CFR Part 1926.

400.07 Excavation of Poor Soils. Where wet, soft, or frozen materials; asphalt, concrete or bricks; cinders, ashes, refuse, trash, organic material or other deleterious excavated substances are encountered, the material shall be rejected, hauled away, and disposed of by the Contractor. All such excavated materials shall be removed from the job site and disposed of properly. If the material is disposed of on private property, prior written permission shall be obtained from the owner of the property, and a copy submitted to the City's designated representative. All materials must be removed in a timely manner.

The Contractor shall over excavate the unsuitable material and remove it to a minimum depth of one (1) foot below the plan sub-grade. The over excavated volume shall be replaced with clean compacted sand, free from clay and organics, to re-establish the sub-grade.

400.07.1 Backfill in Poor Soils. The following section shall be used in addition to Division VI – Water Mains, Section 32.13. Where additional bedding and backfill materials are required to replace poor soils, clean sand, free from clay and organics, shall be compacted around and under the pipe. Backfill materials shall be deposited in the trench for its full width on each side of the pipe fittings and appurtenances simultaneously.

From the top of the pipe, to a depth of twelve (12) inches above the top of the pipe, the trench shall be backfilled and compacted. Special care shall be used in placing this portion of backfill so as to avoid disturbing the pipe. The remainder of the trench shall be backfilled and compacted per Section 36.13 and Section 36.13.1.

400.07.2 Basis of Payment. When authorized by the Utilities Department, removal and replacement of unsuitable excavated and backfill materials shall be measured and added to the established quantities as an Extra Work item, in conjunction with General Specifications, Section 9.04, titled "Payment for Extra Work."

400.08 Compaction Testing. Density tests will be required for each twelve (12) inch vertical lift of compacted material placed at a frequency of not greater than 300 lineal feet of trench. The Contractor shall be required to hire an independent soil testing laboratory to test separately each lift for density and certify that each and every lift was properly compacted: Turf areas – 88%; Roadways and driveways – 95%

Density test results shall be submitted to the City before acceptance of the project. The Contractor shall maintain the trench backfill for one (1) year from the date of acceptance of the project by the City.

400.09 Protection of Property and Surface Structures. All property and structures shall be protected unless their removal is shown on the Contract drawings or authorized by the City engineer.

400.10 Miscellaneous Removal Items. It shall be the Contractor's responsibility to notify the property owners within the project area, a minimum of five (5) days ahead of

construction, so the property owners may remove small trees, bushes, shrubs, fences, sod, sprinkler systems, etc., from the construction limits if they wish to save them.

SECTION 500 – WATERWORKS INSTALLATION

500.01 Baselines, Benchmarks, and Control Points. All water main work shall be laid out from existing section corners, benchmarks, and control points established by the Utilities Department. The Contractor shall be responsible for executing the work to the lines and grades established. It shall be the Contractor's responsibility to maintain and preserve all baselines and control points. If such marks are destroyed by the Contractor without authorization by the Utilities Department, all such lines, points, monuments and stakes shall be re-established by the Utilities Department, and the expense charged to the Contractor.

500.02 Property Corners. It shall be the Contractor's responsibility to protect existing property corners and government surveying monuments. If property corners are disturbed or destroyed during construction, it shall be the Contractor's obligation to employ a licensed land surveyor to replace those damaged or destroyed corners. No extra or additional payment will be made for restoration of property corners.

500.03 Limits of Construction. The Contractor shall confine all work activities to the public street right-of-way, utility easements and project staging area. Failure to restrict construction activities to the project limits may result in damage to private property and bad public relations. Any property damage done by the Contractor beyond these limits shall be immediately repaired at the Contractor's expense.

500.04 Water Main Gaskets. All pipe and fitting gaskets shall be vulcanized styrene butadiene rubber (SBR) and shall conform to the "American National Standard for Rubber-Gasket Joints for Ductile-Iron Pressure Pipe and Fittings, ANSI/AWWA C111 /A21.11 and subsequent revisions. All necessary gaskets and gasket lubricants shall be the type recommended and supplied by the pipe manufacturer.

500.05 Water Main Pipe Cover. The following section shall be used in addition to Grand Island Specifications Division VI Water Mains, Section 32.01. It is intended that all water main pipe fittings, service lines, and appurtenances shall be installed to the alignment and grade shown on plans. The elevation of the piping may vary depending upon existing obstructions and proposed improvements encountered during construction. Any deviations shall have the approval of the Utilities Department. Where additional depth is required to clear encountered or proposed grade interference, the additional excavation and backfill shall be incidental to the project and not claim for extra work.

500.06 Location of City Supplied Hydrants. The fire hydrant with alpha connection will be supplied by the City and installed by the Contractor. Hydrant will be available to the Contractor for pick up at the Water Department warehouse located at 370 N. Pine

Street. The Contractor shall notify the Water Department (308-385-5436) at least twenty-four (24) hours in advance to make arrangements for material pick up.

500.07 Fire Hydrant Testing. During such times when fire hydrants have been installed, yet not accepted and approved for use, they shall be covered, except during testing, indicating they are not in service. Hydrant bags shall be made of a minimum 4 Mil. Polypropylene material, orange in color, printed with the words “Not in Service” and supplied with tie-down straps. Bags shall be furnished by the City and installed and maintained by the Contractor.

500.08 Water System Shut-Down. When specific activities are deemed that a section of the existing water main needs to be isolated and shut-down, the Contractor shall notify the Utilities Department representative and the Grand Island Water Department (308-385-5436) a minimum of seventy-two (72) hours in advance. All related work to accomplish the shut-down shall be scheduled and coordinated with the Grand Island Water Department.

500.09 Polyethylene Encasement. This section shall be used in conjunction with City of Grand Island Specification Division VI Water Mains, Section 34 – Polyethylene Encasement; and Standard Plan 155. The Contractor shall furnish complete all materials and field apply polyethylene encasement to all ductile-iron carrier pipe, fittings, valves, and other appurtenances associated with the piping system.

500.10 Water Main Abandonment in Manholes. The existing 6” diameter water main traverses through the existing storm sewer manholes in two intersection locations: Pleasant View Drive and Phoenix Avenue; and Pleasant View Drive and Delaware Avenue. At each of the locations, or as otherwise directed by the City Utilities Department, the Contractor shall remove and abandon the water main and rehabilitate the manhole as required.

The water main shall be removed from within the manhole without disrupting the integrity of the manhole. The water main piping shall be cut as near as practical where it protrudes from the inside wall of the manhole. The piping shall be properly abandoned, plugged, and sealed to prevent infiltration of water, soils or other debris.

The pipe plug shall consist of a fast setting, non-metallic, shrink-resistant cement repair product approved for use in below grade applications to make repairs or to stop flowing water leaks in concrete and masonry structures. Completely fill the end of the pipe with concrete. Force the concrete into the end of the pipe for a minimum distance of eighteen (18) inches

The entire annular space between the outside of the abandoned water main and the inside manhole wall shall be grouted. Grout, where required, shall consist of equal parts of sand and cement with sufficient water to produce the proper consistency.

During the abandonment and rehabilitation process, the Contractor shall protect the manhole to withstand the forces generated by the equipment, water, and air pressures used to complete the abandonment and rehabilitation installation.

Debris from the abandonment and rehabilitation process shall not be allowed to enter the sewer system. The Contractor shall furnish, install, maintain, and remove debris collection devices while maintaining sewer flows. The Contractor shall remove and properly dispose of all debris collected during the water main abandonment and manhole rehabilitation.

500.10.1 Measurement and Payment. Abandonment of the water main at manhole locations shall be per the Contract unit price complete. The unit price shall be full compensation for furnishing all labor, materials, tools, equipment, appurtenances, and incidentals as required for the complete removal and abandonment of the water main and rehabilitation of the manhole.

SECTION 600 – RESTORATION

600.01 Hard Surfaced Areas. Hard surfaced roadways, driveways or parking areas in conflict with the water main to be installed, shall be removed and replaced by the Contractor. Replacement shall be equal to or better than original. All concrete pavement restoration shall conform to Division II - Portland Cement Concrete Pavement of the City of Grand Island standard specifications. All asphaltic pavement shall conform to Division IV - Asphaltic Concrete Surface Course of the standard specifications for the City of Grand Island.

Within two (2) weeks after starting work in an area, the Contractor shall commence restoration activities to minimize disruptions and inconvenience during construction. Restoration shall include, but not limited to: grading, replacement of sidewalks, driveways and roadways.

600.01.1 Cold Weather Concreting. When average daily temperatures are below 40°F (4.5°C) for more than three consecutive days, the Contractor shall use approved practices and procedures that will assure that placed concrete will be sufficiently strong and durable to fully meet design requirements. The use of insulating coverings, accelerating admixtures, high-early strength cement, or additional cement may be used to develop the level of strength required. All such methods shall fully conform to the American Concrete Institute's "Recommended Practice for Cold Weather Concreting."

There shall be no additional payment if such cold weather techniques are required.

600.02 Restoration – Roadways. This work shall consist of repairing roadways and/or parking areas at the locations shown on the plans or as designated by the City. The work shall include removal, disposal, preparation of the repair area, and furnishing, placing, finishing and curing for the repairs.

- Concrete surfacing shall be removals shall be along existing joints and removed for the full depth of the slab repair area.
- Asphalt surfacing removals shall be made by cutting a full depth saw joint to provide a straight, smooth edge where the new surfacing adjoins the existing surfacing.

The following shall be used in addition to City Specifications, Division II, Section 11.01. The thickness of the new concrete pavement shall match existing adjacent pavement or be a minimum six (6) inches, whichever is greater, or as deemed appropriate by Utilities Department representative. When required by the plans or field conditions warrant and as directed by the Utilities Department representative, pavement repair shall be made with Type 47B-HE-3,500 (high early) Portland Concrete Pavement, as specified in the Nebraska Department of Roads (2007 Version) Standard Specifications Division 600-Portland Cement Concrete Pavements, Section 605- Concrete Pavement Repair.

When it becomes necessary to close any portion of the public roadway during the execution to the project, the Contractor shall notify the Engineering Division of the Grand Island Public Works Department (308)385-5444, ext. 260, at least seventy-two (72) hours in advance.

600.03 Driveway and Sidewalk Restoration. Replacement of concrete driveways and concrete sidewalks shall be as per Division III – Curb and Gutter, Sidewalks, and Driveways of the standard specifications for the City of Grand Island.

600.03.1 Sidewalk Ramps. Sidewalk replacements shall follow the latest Americans with Disabilities Act (ADA) requirements and be constructed using detectable warning plates with a truncated dome design. Plates shall provide a permanent, maintenance free installation that will effectively warn the visually impaired.

600.03.2 Detectable Warning Plates. Sidewalk curb ramps shall incorporate detectable warning plates with a truncated dome design. Plates shall provide a permanent, maintenance free installation, which will effectively warn the visually impaired.

Detectable warning plates shall be pressed (wet-set) into freshly poured concrete and firmly secured by high-strength anchors. Plates shall as a minimum be: Glass fiber polymer concrete panels, powder coat painted brick red; utilizing vent holes to release air for maximum concrete contact and not trap air or water when installed; and incorporate an all-weather non-skid surface and textured tread for slip resistance.

Prior to ordering detector plates, the Contractor shall submit to the Grand Island Utilities Department for approval, the manufacturer's standard data sheets on materials proposed to be furnished.

600.04 Restoration - Non-Hard Surfaces. All non-hard surfaced and turf areas disturbed by excavation, backfill, and construction operations shall be fine graded, and hand dressed as required to restore the terrain to its original shape. The Contractor

shall leave the area in such a manner as to allow drainage without ponding, free of debris, and shall protect from erosion.

600.05 Sodding. For established residential lawns, public easements and right-of-way, or as otherwise directed by the City, restoration of turf areas shall comply with the following amended requirements in accordance with the State of Nebraska Department of Roads Standard Specifications.

All materials furnished shall be identified and tagged with the botanical genus, species, and common name or variety.

600.06 Time of Sodding. Sodding shall not be performed when the ground is frozen, or weather conditions are not favorable for growth as determined by the City.

600.07 Sod Requirements. Sod shall be from approved field sources. The sod shall be a first-class representation of normal species or varieties of cool season grasses for low maintenance areas. All materials furnished shall be identified and tagged with the botanical genus, species, and common name or variety.

The sod shall be an approved mixture of tall fescues and perennial ryegrasses and shall have been grown from culturally planted seed specifically for the production of sod and shall have been maintained by acceptable methods for the production of sod. The sod shall be mowed and raked to remove stems, sticks, and clippings prior to cutting. The sod shall be cut to a depth of approximately three-quarters of an inch. Sod shall be free of noxious weeds and relatively free from all other weeds. Extreme care shall be taken in cutting, handling, transporting and laying the sod to avoid unnecessary damage to and loss of earth from the roots of the sod. Sod shall not have dry or dead edges.

600.08 Soil Preparation. Areas that are to be sodded shall be clear of debris and dead vegetation prior to the preparation of the sod bed. The sod shall not have a crusted appearance. All erosion shall be filled prior to laying the sod. All loose earth shall be firmed prior to laying the sod.

600.09 Fertilizer. Fertilizers shall not be applied.

600.10 Laying the Sod. Sod will be transported to the site within 24-hours from the time it is cut. The Contractor shall exercise care at all times to retain the native soil on the sod roots. Dry and/or frozen sod will not be acceptable. The sod bed shall be thoroughly dampened prior to placing sod.

The sod shall be laid over the area in strips edge to edge in a compact mass to produce tight joints. The sod shall be laid approximately one (1) inch below adjoining ground surfaces and flush with adjoining sod. At the end of walks, drives, and curbs the sod will be laid to the same finish grade as the abutting surfaces.

Sod shall be rolled one time with an approved sod roller immediately after its placement to provide an even surface and eliminate air pockets. The sod shall be watered immediately after it is placed.

600.11 Watering. The Contractor will be responsible for watering sodded areas a minimum of once daily for a period of fourteen (14) days following the initial sodding operation.

600.12 Acceptance. At the end of the fourteen (14) day establishment period, the Contractor shall request a sodding inspection by the City. Any portion of the sodded area deemed by the City to be thin, weak or dead or otherwise not in good growing condition, will be removed and replaced by the Contractor with fresh live sod.

All replaced sod will begin again the fourteen (14) days of watering cycle. No partial acceptance will be made.

600.13 Sprinkler Irrigation Systems. The Contractor shall be responsible for repairing any sprinkler irrigation systems which are damaged during construction of the project. Irrigation system repairs shall be made for any component which is damaged due to construction activities, including, but not limited to: sprinkler heads, piping, valves, control wires, and controllers. Damaged materials shall be replaced with new materials of the same type, make, and model unless otherwise directed by the City. Repairing sprinkler systems will not be paid for separately, but shall be considered subsidiary to the other items in the Bid.

SECTION 700 – DEWATERING

700.01 General. When required, this section will be used in conjunction with Division VI, Section 36, Dewatering. It shall be the Contractor's responsibility for devising and operating a construction dewatering system.

700.02 Discharge Permit. The City of Grand Island has a Construction Dewatering Permit from the State of Nebraska Department of Environmental Control. A copy of permit number NEG671000-2017 is contained in the Appendix.

700.03 Discharge Water. All dewatering discharge water shall be conveyed to locations as previously approved by the City. It will be the Contractor's responsibility to make driveway and street crossings in such a manner as to not interfere with normal use. The Contractor will not be allowed to utilize the street pavement gutter line for open conveyance of discharge water.

SECTION 800 – TEMPORARY EROSION CONTROL

800.01 Storm Water Discharges. When required, the Contractor shall fully comply with all Phase II Construction Requirements.

Phase II of the storm water program applies to all construction activities disturbing one or more acres of land, or if the site is less than one acre but part of a larger common

plan of development (such as a large subdivision). These sites must obtain an NPDES permit before any earthmoving activities begin. The NDEQ may require construction sites disturbing less than one acre of land to obtain a storm water discharge permit if such activities would adversely affect water quality.

800.02 Best Management Practices (BMPs). The Contractor shall implement and maintain such BMPs as relevant to conduct the operations and maintain the work so that adequate drainage and erosion control are in place at all times. Techniques will be employed for wind erosion control, sediment control, non-storm water control, and waste management and materials pollution; including preventing petroleum products, chemicals, harmful materials, construction debris, and excessive suspended solids from entering waterways.

The Contractor shall follow guidelines established in City of Grand Island City Code; Chapter 40, Storm Water Management. The utility construction defined in 40.11, A thru D; shall comply with guidelines listed as disturbing LESS than one (1) acre. The Contractor shall exercise every reasonable precaution to protect channels, storm drains, and bodies of water from pollution. It shall conduct and schedule operations so as to minimize or avoid muddying and silting of said channels, drains, and waters. Water pollution control work shall consist of constructing those facilities which may be required to provide prevention, control, and abatement of water pollution.

The Contractor will install and maintain Best Management Practices (BMPs) to include silt fence, construction rock entrances or silt checks if needed. A uniform perennial vegetative cover with a minimum density of 70 percent of the native background vegetative cover is required for final stabilization.

The City may perform periodic drive-by inspections and provide the Contractor any findings, but the contractor will be responsible for the routine/rain fall event inspections. Separate payment will NOT be made for installation of inlet protection as shown on the plans or any other Best Management Practices outlined above. All shall be paid for in the Sediment and Erosion Control pay item.

Curb Inlet Protector shall be SWP-CI “Big Red” by A.S.P. Enterprises or approved equal.

800.03 Drainage and Erosion Controls. The Contractor shall be responsible for evaluating the construction site and determining the need to prevent soil erosion and track-off of material from the project site, control dust, and control the discharge of sediment to the storm sewer system. Such measures may include but not limited to, taking temporary measures and/or installing permanent erosion control structures such as sediment traps, silt fence, ditch checks, etc. Such features shall be incorporated into the project at the earliest practicable time and shall be properly maintained by the Contractor.

The Contractor shall exercise every reasonable precaution throughout the project to provide adequate drainage and erosion controls on the project site and adjacent properties. Construction of drainage facilities, as well as performance of other Contract work which will contribute to the control of siltation, shall be carried out in conjunction with other project operations, or as soon thereafter as is practicable.

All erosion resulting from the Contractor's operations and the elements must be corrected by the Contractor at no additional cost to the City. The Contractor shall conduct all construction activities so as to avoid soil erosion. Each day, areas shall be protected so that storm runoff will not erode soil.

DIVISION I

GENERAL SPECIFICATIONS

APPLICABLE TO ALL CONSTRUCTION CONTRACTS

DIVISION I
GENERAL SPECIFICATIONS

C O N T E N T S

Section	Description
1	**DEFINITIONS OF WORDS AND TERMS**
1.01	Abbreviations
1.02	Advertisement
1.03	Award
1.04	Backslope
1.05	Bidder
1.06	Calendar Day
1.07	Change Order
1.08	City
1.09	Contract
1.10	Contract or Performance Bond
1.11	Contract Item
1.12	Contract Period
1.13	Contractor
1.14	Cul-de-sac Street
1.15	Culvert
1.16	Easement (Right-of-way)
1.17	Employee
1.18	Engineer
1.19	Extra Work
1.20	Holidays
1.21	Inspector
1.22	Laboratory
1.23	Notice to Bidders
1.24	Plans
1.25	Project
1.26	Bid
1.27	Bid Form
1.28	Bid Guarantee
1.29	Right-of-way
1.30	Special Provisions
1.31	Specifications
1.32	Subcontractor
1.33	Superintendent
1.34	Supplemental Agreements
1.35	Supplemental Specifications
1.36	Surety
1.37	Work
1.38	Working Day
1.39	Working Drawings
1.40	Work Order
1.41	Completion of the Work and Formal Acceptance by the City
1.42	Final Acceptance of the Work

Revised 1-25-2011

Section	Description
2	**BID REQUIREMENTS AND CONDITIONS**
2.01	Contents of Bid Forms
2.02	Interpretation of Quantities in Bid Forms
2.03	Examination of Plans, Specifications, Special Provisions and Site of Work
2.04	Preparation of Bid
2.05	Statement of Bidder's Plant and Financial Conditions
2.06	Certified, Check, Cashier's Check, or Bid Bond
2.07	Filing of Bid
2.08	Withdrawal of Bid
2.09	Public Opening of Bids
2.10	Material Guarantee
3	**AWARD AND EXECUTION OF THE CONTRACT**
3.01	Consideration of Bids
3.02	Award of Contract
3.03	Cancellation of Award
3.04	Return of Bid Guarantee
3.05	Performance Bond
3.06	Contract Documents **Revised 1-25-2011**
3.07	Failure to Execute Contract
4	**SCOPE OF WORK**
4.01	Intent of Plans and Specifications
4.02	Special Work
4.03	Increased or Decreased Quantities of Work **Revised 1-25-2011**
4.04	Extra Work
4.05	Maintenance of Detours
4.06	Temporary Traffic Control **Revised 1-25-2011**
4.07	Maintenance of Traffic
4.08	Street Closing
4.09	Miscellaneous Removal Items
4.10	Removal and Replacement of Property Stakes
4.11	Removal and Disposal of Structures and Obstructions
4.12	Rights In and Use of Materials Found on the Right-of-Way
4.13	Construction and Demolition Debris
4.14	Final Cleaning Up
4.15	Right-of-way
4.16	Railroad Crossings
4.17	Safety and Health Regulations for Constructions
5	**CONTROL OF WORK**
5.01	Authority of Engineer
5.02	Plans and Working Drawings
5.03	Alteration of Plans or of Character of Work
5.04	Coordination of Plans, Specifications, Special Provisions, and Supplemental Specifications
5.05	Cooperation of Contractor

Section	Description
5.06	Surveys
5.07	Authority and Duties of Inspector
5.08	Inspection of Work
5.09	Removal of Defective Work
5.10	Final Inspection
6	**CONTROL OF MATERIALS**
6.01	Source of Supply and Quality Requirements
6.02	Methods of Sampling and Testing, and Cited Specifications
6.03	Storage of Materials
6.04	Unacceptable Materials
6.05	Guarantee
6.06	"Or Equal" Clause
7	**LEGAL RELATIONS AND RESPONSIBILITY TO THE PUBLIC**
7.01	Laws to be Observed
7.02	State and City Fair Labor Standards
7.03	Anti-discrimination
7.04	Permits
7.05	Patents
7.06	Restoration of Surface Opened by Permit
7.07	Safety, Health, and Sanitation
7.08	Barricades and Warning Signs
7.09	Use of Explosives
7.10	Claims for Labor and Materials
7.11	Contractor's Insurance
7.12	Proof of Carriage of Insurance
7.13	Contractor's Responsibility for Utility Property and Services
7.14	No Waiver of Legal Rights
7.15	Exposure of Pipe or Manholes
8	**PROSECUTION AND PROGRESS**
8.01	Subletting or Assigning of Contract
8.02	Prosecution of Work
8.03	Limitations of Operations
8.04	Methods and Equipment
8.05	Temporary Suspension of Work
8.06	Liquidated Damages
8.07	Extension of Contract Period
8.08	Abrogation
8.09	Termination of Contractor's Responsibility
9	**MEASUREMENT AND PAYMENT**
9.01	Payments
9.02	Payments Withheld
9.03	Acceptance and Final Payment
9.04	Payment for Extra Work

Revised 1-25-2011

DIVISION I
GENERAL SPECIFICATIONS

SECTION 1 - DEFINITIONS OF WORDS AND TERMS

Wherever in these specifications or in other contract documents the following terms or pronouns in place of them are used, the intent and meaning shall be interpreted as follows:

1.01 Abbreviations.

AASHTO	American Association of State Highway And Transportation Officials
ASTM	American Society for Testing and Materials
ANSI	American National Standards Institute
AWWA	American Water Works Association
AREA	American Railway Engineering Association
AWS	American Welding Society
AAN	American Association of Nurserymen

1.02 Advertisement. The advertisement for work or materials on which bids are to be received.

1.03 Award. The decision of the City to accept the bid of the lowest responsible bidder for the work, subject to the execution and approval of a satisfactory contract therefor and bond to secure the performance thereof and to such other conditions as may be specified or otherwise required by law.

1.04 Backslope. The sloping surface of a cut, the downward inclination of which is toward the roadbed.

1.05 Bidder. Any individual, firm, or corporation formally submitting a bid for the work contemplated, acting directly or through a duly authorized representative.

1.06 Calendar Day. Every day shown on the calendar, Sundays and holidays included.

1.07 Change Order. A written order to the Contractor, signed by the Engineer, ordering a change in the work from that originally shown in the plans and specifications.

1.08 City. The word "City" as used in these specifications refers to the City of Grand Island, Nebraska, acting through its City Council.

1.09 Contract. The written agreement executed between the City and the Contractor, covering the performance of the work and the furnishing of labor and materials, by which the Contractor is bound to perform the work and furnish the labor and materials, and by which the City is obligated to compensate Contractor therefor at the mutually established and accepted rate or price.

The contract shall include the "Notice to Bidders", these specifications, the Contractor's bond, the general and detailed plans, the bid, special provisions, and supplemental agreements.

1.10 Contract or Performance Bond. The approved form of security, executed by the Contractor and their surety or sureties, guaranteeing complete execution of the contract and all supplemental agreements pertaining thereto and the payment of all legal debts pertaining to the construction of the project.

1.11 Contract Item. An item of work specifically described and for which a price, either unit or lump sum, is provided. It includes the performance of all work and the furnishing of all labor, equipment, and materials described in the text of a specification item included in the contract or described in any subdivision of the text of the supplemental specification or special provision of the contract.

1.12 Contract Period. The period from the date specified in the contract for the commencement of the work to the date specified for its completion, both dates inclusive.

1.13 Contractor. The party of the second part to the contract; the individual, firm, or corporation undertaking the execution of the work under the terms of the contract and acting directly or through Contractor's agents or authorized employees.

1.14 Cul-de-sac Street. A local street open at one end only and with special provision for turning around.

1.15 Culvert. Any structure not classified as a bridge which provides an opening under any street.

1.16 Easement (Right-of-way). A right acquired by public authority to use or control property for a designated purpose.

1.17 Employee. Any person working on the project mentioned in the contract of which these specifications are a part, and who is under the direction or control or receives compensation from the Contractor or Contractor's subcontractor.

1.18 Engineer. The City Engineer, acting either directly or through an assistant or other representative duly authorized by the City Engineer, such assistant or representative acting within the scope of the particular duties assigned or with the authority given.

1.19 Extra Work. Work performed by the Contractor in order to complete the contract in an acceptable manner but for which there is no basis of payment provided in the contract.

1.20 Holidays. In the State of Nebraska, holidays occur on: January 1, Martin Luther King, Jr. Day in January, Presidents' Day in February, Arbor Day in April, Memorial Day in May, July 4, Labor Day in September, Columbus Day in October, Veterans Day and Thanksgiving Day in November, and December 25. If any of said dates fall on Sunday, the following Monday shall be a holiday. If any of said dates fall on Saturday, the previous Friday shall be a holiday.

1.21 Inspector. An authorized representative of the Engineer assigned to make detailed inspection of any or all portions of the work performed and materials furnished by the Contractor.

1.22 Laboratory. The testing laboratory of the City or any other testing laboratory which may be designated by the Engineer.

1.23 Notice to Bidders. The provisions, requirements, and instructions pertaining to the work to be awarded, manner and time of submitting bids , quantities of the major items or work required, as prepared for the information of bidders.

1.24 Plans. The official plans, profiles, typical cross sections, general cross sections, working drawings, and supplemental drawings, or exact reproductions thereof, approved by the Engineer, which show the location, character, dimensions, and details of the work to be done, and which are to be considered as a part of the contract supplementary to these specifications.

1.25 Project. All work necessary to be performed under the contract.

1.26 Bid. The offer of the bidder, submitted on the prescribed bid form, to perform the work and to furnish the labor and materials at the prices quoted by the bidder.

1.27 Bid Form. The approved form on which the City requires formal bids be prepared and submitted.

1.28 Bid Guarantee. The security furnished by the Bidder with Bidder's bid for a project as a guarantee that Bidder will enter into a contract for the work if said bid is accepted.

1.29 Right-of-way. The land area which is reserved or secured by the City for constructing the work or for obtaining material therefor.

1.30 Special Provisions. Special directions, provisions, or requirements peculiar to the project under consideration and not otherwise thoroughly or satisfactorily detailed or set forth in the specifications.

1.31 Specifications. The general term comprising all the directions, provisions, and requirements contained herein, together with such as may be added or adopted as supplemental specifications or special provisions, all of which are necessary for the proper performance of the contract.

1.32 Subcontractor. Any individual, firm, or corporation to whom the Contractor, with the written consent of the City, sublets any part of the contract.

1.33 Superintendent. The representative of the Contractor, present on the work at all times during progress, authorized to receive and fulfill instructions from the Engineer and capable of superintending the work efficiently.

1.34 Supplemental Agreements. Written agreements executed by the Contractor and the City subsequent to having entered into the contract, covering alterations in the plans or unforeseen items of construction.

1.35 Supplemental Specifications. Specifications adopted subsequent to the publication of this book. They generally involve new construction items or substantial changes in the approved specifications. Supplemental specifications shall prevail over those published in this book whenever in conflict therewith.

1.36 Surety. The corporate body bound with and for the Contractor for the acceptable performance of the contract, the completion of the work, and for payment of all just claims arising therefrom.

1.37 Work. Work shall be understood to mean the furnishing of all labor, materials, equipment, and other incidentals necessary or convenient to the successful completion of the project by the Contractor and the carrying out of all the duties and obligations imposed by the contract.

1.38 Working Day. Any day, except Saturdays, Sundays, and Nebraska holidays, on which the Contractor is not prevented by weather, soil conditions, or other conditions beyond the Contractor's control, adverse to the current controlling operation or operations, as determined by the Engineer, from proceeding with at least 80 percent of the labor and equipment force normally engaged in such operation or operations for at least 50 percent of the full number of hours in Contractor's normal daily schedule. Also, a Saturday, Sunday, or Nebraska holiday on which any work is performed on the current controlling operation or operations unless the Contractor is prevented by weather, soil conditions, or other conditions beyond the Contractor's control as determined by the Engineer, from proceeding for at least 50 percent of the full number of hours in their normal schedule with 80 percent of the normal working force.

1.39 Working Drawings. Stress sheets, shop drawings, erection plans, falsework plans, framework plans, cofferdam plans, bending diagrams for reinforcing steel, or any other supplementary plans for similar data which the Contractor is required to submit to the Engineer for approval.

1.40 Work Order. A written order signed by the Engineer, of a contractual status requiring performance by the Contractor without negotiation of any sort and may involve starting, resuming, or the suspension of work. (Not to be confused with extra work order).

1.41 Completion of the Work and Formal Acceptance by the City. Whenever the term "completion of the work and formal acceptance by the City" is used, it refers to and means the formal acceptance of the work by the Engineer and the City at the time the Contractor has all work under the contract completed and in place.

1.42 Final Acceptance of the Work. Whenever the term "final acceptance of the work" is used, it refers to and means the time when the Engineer and the City finally accept the work. The contractor guarantee shall remain in force from the City's final acceptance for a period of one year.

Revised 1-25-2011

SECTION 2 – BID REQUIREMENTS AND CONDITIONS

2.01 Contents of Bid Forms. Bidders will be furnished with bid forms which will state the location and description of the contemplated work and will show the estimate of the various quantities and kinds of work to be performed or materials to be furnished, with a schedule of items for which unit bid prices are asked, the time in which the work must be completed and the date, time, and place of opening bids. All special provisions and required provisions will be grouped together and bound with or included through reference in the bid form.

2.02 Interpretation of Quantities in Bid Forms. The quantities listed in the bid forms are to be considered as approximate, unless otherwise provided by special provision. It is understood that the quantities of work to be done and materials to be furnished may each be increased, diminished, or omitted as hereinafter provided without in any way invalidating the unit bid prices, except as provided in the section in these specifications entitled Increased or Decreased Quantities of Work.

2.03 Examination of Plans, Specifications, Special Provisions, and Site of Work. The bidder is required to examine carefully the site, the bid, plans, specifications, special provisions, and contract form for the work contemplated, and it will be assumed that the bidder has investigated and is satisfied as to the conditions to be encountered, as to the character, quality, and quantities of work to be performed and materials to be furnished and as to the requirements of these specifications, the special provisions, and contract. It is mutually agreed that the submission of a bid shall be considered prima facie evidence that the bidder has made such examination.

2.04 Preparation of Bid. Bidders shall submit their bids on blank forms furnished by the Engineer with the full name and address and the place of business or residence of the bidder. If the bidder is co-partnership, the signature shall be by a member of the firm with the names and addresses of each member. If the bidder is a corporation, the signature shall be by an officer of the corporation in the corporate name and with the corporate name and the corporate seal attached thereto.

All blank spaces in the form shall be fully filled; numbers shall be stated in legible figures and writing when required; the signature shall be longhand; and the complete form shall be without interlineation, alteration, or erasure.

No oral, telegraphic, or telephonic bids or modifications will be considered.

When certain alternative prices, for both increasing and decreasing the cost, are required, as called for in the bid sheet, it must be understood that all materials and workmanship required shall be the best of their respective kinds and in all cases shall correspond with similar work herein specified and, if accepted, the work shall be done under the general terms of the specifications.

2.05 Statement of Bidder's Plant and Financial Conditions. Each bidder may submit with bid and, in any event, the City may, after bids are opened and prior to award of contract, require any bidder to submit the following data:

1. A statement that the bidder maintains a permanent place of business and address thereof;
2. A statement of equipment which the bidder proposes to use on the project, together with a statement noting that equipment previously mentioned which the bidder owns and that which bidder does not own but is certain bidder will be able to rent or otherwise procure for use on the project;
3. A financial statement, duly sworn to in a form approved by the City, listing assets and liabilities;
4. Statement listing projects of similar nature which the bidder has constructed or in the construction of which the bidder was actively engaged in a responsible capacity. Any bidder may be required by the City to submit additional data to satisfy the City that such bidder is prepared to fulfill the contract if it is awarded to them.

2.06 Certified Check, Cashier's Check, or Bid Bond. Each bidder must submit with the bid a certified check, cashier's check, or bid bond in the amount of not less than five percent (5%) of the amount bid, drawn to the order of the City Treasurer, Grand Island, Nebraska, guaranteeing the execution of the contract and bond required within ten (10) days of the notification of award. Any certified check must be issued by a bank in the State of Nebraska.

2.07 Filing of Bid. Bidders shall submit bid data on items offered in the Bid by filling in one set of data sheets supplied by the Engineering Department. The bid sheets shall be filled out legibly in black ink to permit reproduction.

Bidder security, when required, shall be enclosed in a special envelope marked, "BIDDER SECURITY/BID FOR _____." The envelope shall contain only a cashier's check or bidder's bond. This special envelope shall be attached to a sealed envelope containing the bid, filled out specifications, descriptive information drawings, qualification list and any other bid materials. This second envelope shall be marked "BID FOR _____." Bids of an incomplete nature or subject to multiple interpretations may, at the option of the Purchaser, be rejected as being irregular.

All bids shall be filed with the City at the place designated in the Notice to Bidders, prior to the time advertised for the opening of bids.

2.08 Withdrawal of Bid. A bidder will be permitted to withdraw said bid unopened after it has been submitted, if bidder's request for withdrawal is made in writing and delivered personally by the bidder or bidders' authorized representative prior to the time specified for opening of bids.

2.09 Public Opening of Bids. Bids will be publicly opened and read at the time and place stipulated in the Notice to Bidders.

2.10 Material Guarantee. Before any contract is awarded, the bidder may be required to furnish a complete statement of the origin, composition, and manufacture of any or all materials to be used in the construction of the work together with samples, which samples may be subjected to the test provided for in these specifications to determine their quality and fitness for the work.

SECTION 3 - AWARD AND EXECUTION OF THE CONTRACT

3.01 Consideration of Bids. After the bids are opened and read, they will be compared on the basis of the summation of the products and the quantities shown in the bid schedule by the unit bid prices. The results of such comparisons will be immediately available to the public.

The right is reserved to reject any and all bids and to waive technical errors as may be deemed best for the interest of the City.

3.02 Award of Contract. In the award of contract, consideration will be given not only to the prices bid but also the mechanical and other equipment available to the bidder, the financial responsibility of the bidder, and bidder's ability and experience in the performance of like or similar contracts.

Award of contracts will be made as promptly as practical after bids have been opened and read. The City reserves the right to delay the award for such time as is needed for the consideration of the bids and for the receipt of concurrence in recommended contract awards from other governmental agencies whose concurrence may be required.

3.03 Cancellation of Award. The City reserves the right to cancel the award of any contract at any time before execution of the said contract by all parties without any liability against the City.

3.04 Return of Bid Guarantee. Bid guaranties will be returned to the unsuccessful bidders by mail promptly after the signing of the contract has been made. Return to the successful bidder will be made after the signing of the contract and filing of the contract bond.

3.05 Performance Bond. The Contractor shall furnish a performance bond with a company having the approval of the City in an amount of 100 percent of the contract price guaranteeing complete and faithful performance of the contract, payment of all bills of whatever nature which could become a lien against the property, and guaranteeing replacement of defective materials and workmanship for a period of one year after completion of the contract.

3.06 Contract Documents. Three (3) copies of Contract Documents shall be made, executed, and distributed as follows:

One copy to City Clerk
One copy to Contractor One copy to Engineer

The following documents are a part of the contract:

*Notice to Bidders	*General Specifications
*Instructions to Bidders	*Special Provisions
*Bid	*Supplemental Specifications
*Detailed Specifications	*Performance Bond
*Contract	*Additional Drawings as required to make clear the intent of the contract

Revised 1-25-2011

3.07 Failure to Execute Contract. Failure to execute a contract and file an acceptable performance bond as provided herein within ten (10) days from date of award shall be just cause for the annulment of the award and the forfeiture of the certified check or cashier's check to the City, not as a penalty but in liquidation of damages sustained.

SECTION 4 - SCOPE OF WORK

4.01 Intent of Plans and Specifications. The intent of the plans and specifications is to provide for the construction and completion of every detail of the work described therein. It shall be understood by the Contractor that Contractor will furnish all labor, materials, tools, transportation, and supplies required for all or any part of the work to make each item complete in accordance with the spirit of the contract. It is understood that the apparent silence of the specifications as to any detail or the apparent omission of a detailed description concerning any point shall be regarded as meaning that only the best general practice is to prevail and that only materials and workmanship of the first quality are to be used.

For the purpose of design and the preparation of the Engineer's Estimate, the City may perform a reasonable amount of exploratory work to gain information relative to surface and subsurface conditions relating to type of soil, moisture content, and types and extent of rock strata.

This information when shown on the plan represents to the best of the City's knowledge conditions as of the date the survey was made. The appearance of this information on the plan will not constitute a guarantee that conditions other than those indicated will not be encountered at the time of construction.

The bidder may utilize this information as they see fit. Any bidder interested in the work is authorized to make whatever investigation they considers advisable.

In making such additional investigation, the bidder is directed to the Engineer for information relating to available right-of-way. If there are, at that time, any parcels of land over which the City does not have jurisdiction, right of entry must be secured by the prospective bidder from those authorized to grant such permission. Investigational work, performed by a prospective bidder on existing streets open to traffic, shall be performed in compliance with the

requirements of the current Manual on Uniform Control Devices for Street and Highways. All such additional investigational work shall be performed without costing or obligating the City in any way.

4.02 Special Work. Any conditions not covered by these standard specifications are stated in the special provisions.

4.03 Increased or Decreased Quantities of Work. The Engineer reserves the right to alter the quantities of contract items for which there are bid prices. Such increases or decreases in quantities shall be made as the City considers necessary or desirable without waiving or invalidating any of the provisions of the contract. All such alterations must be ordered in writing and a supplemental agreement must be executed with the Contractor for the item or items involved when such alterations involve an increase or decrease of more than 20 percent of the total cost of the work of any group of the contract calculated from the original bid quantities and the contract unit prices. The Contractor shall not start work on any alteration requiring a supplemental agreement until the agreement setting forth an equitable adjustment of compensation, satisfactory to both parties, shall have been executed by the Engineer and the Contractor and approved by City Council.

Revised 1-25-2011

4.04 Extra Work. The City reserves the right to order the performance of work of a class not contemplated in the bid but which may be considered necessary to complete satisfactorily the work included in the contract. Such extra work will be paid for as provided in these specifications under section entitled Payment for Extra Work.

4.05 Maintenance of Detours. Unless so required by the plans or the special provisions, the Contractor will not be required to assume any responsibility in connection with the maintenance or marking of suitable detours.

4.06 Temporary Traffic Control. Part VI of the Manual of Uniform Traffic Control Devices (MUTCD) is the national standard for work zone traffic control. The current version that has been adopted by the Nebraska Department of Roads is also applicable to the City of Grand Island and shall be followed.

Any City crews, contractors, utility company, or any other person, firm or corporation performing work within the right-of-way of any public street, public way, or alley in the City of Grand Island shall install and maintain Temporary Traffic Control (TTC) in accordance with the standards of the MUTCD.

The Public Works Director or their representative shall have the authority to direct corrective actions for any TTC not in compliance with the MUTCD and these provisions. These actions may include suspending operations and requiring removal of all equipment or materials from the right-of-way.

If the TTC is left in place longer than four (4) hours and no personnel are on the site, the individual responsible for installing the TTC shall provide telephone numbers of personnel who will be available on a 24 hours per day, seven days per week basis to the Public Works Director. These individuals shall be responsible for repair, correction, replacement and maintenance of the traffic control devices. These individuals shall perform inspections of the TTC at the site a minimum of twice during the day and once during the night every day until the work is completed and the right-of-way is cleared.

Subsidiary: Unless contract pay items are included with the bid specifications, direct payment for providing, installing, maintaining, and performing site inspections of TTC devices will not be made but are considered subsidiary to other items for which direct payment is

provided. When the contract contains a pay item for TTC, the NDOR standard items, specifications, etc. will be used.

Revised 1-25-2011

4.07 Maintenance of Traffic. The Contractor shall conduct the work so as to interfere as little as possible with public travel, whether vehicular or pedestrian. Whenever it is necessary to cross, obstruct, or close roads, driveways, and walks, whether public or private, the Contractor shall, at Contractor's expense, provide and maintain suitable and safe bridges, detours, or other temporary expedients for the accommodation of public and private travel, and shall give reasonable notice to owners of private drives before interfering with them. Such maintenance of travel will not be required when the Contractor has obtained permission from the owner or tenant of private property or from the authority having jurisdiction over public property involved to obstruct traffic at the designated area.

4.08 Street Closing. In the event it is deemed necessary for the Contractor to close any streets during the execution of said work, the Contractor shall notify the owner of such street closing 72 hours in advance, prior to any street closing due to open cut street crossing.

4.09 Miscellaneous Removal Items. The Contractor shall inform the Engineer sufficiently ahead of construction so landowners can be notified to remove small trees, shrubs, and fences from the construction limits if the landowners desire to save them.

4.10 Removal and Replacement of Property Stakes. If it is necessary to remove any property corners or markers during construction operations, the Contractor shall notify the Engineer so the Engineer can establish reference ties. Any markers removed without notice to the Engineer shall be replaced at the Contractor's expense in accordance with the proper land surveying techniques.

4.11 Removal and Disposal of Structures and Obstructions. The Contractor for bridge and culvert work shall remove any existing structure or part of structure that in any way interferes with the new construction. If specific payment for such work has not been provided in the contract, it will be paid for as extra work.

The Contractor shall remove any materials or structures found on the right-of-way which are not to remain in place or which have not been designated for use in the new construction. The removal and disposal of pipe culverts will not be paid for directly but shall be considered as incidental work, and the cost of such removal and disposal shall be considered to be included in the contract price for other items. Pipe culverts shall be removed by methods that will cause a minimum of damage to the pipe culverts. The removal and disposal of bridges or other masonry or monolithic concrete construction will be paid for. If the contract does not contain an item for such work, it will be paid for as extra work.

4.12 Rights In and Use of Materials Found on the Right-of-way. Unless stated to the contrary in the contract documents, all materials, such as stone, gravel, sand, timber, and structures or parts of structures, found on the right-of-way of the street or on land acquired for the work, are the property of the City or the owner of the fee title to the land, and shall not be used or destroyed by the Contractor without special permission from the Engineer. When the Contractor is permitted to use materials found on the right-of-way, any excavations that they make below the grade elevation shall be backfilled with other suitable materials so the finished street will conform to the grade shown on the plans. No extra compensation will be allowed for such backfilling.

When rock excavation is encountered, any portion of rock excavation which would otherwise be deposited in waste areas and not be incorporated in the embankments may be processed and used, royalty free, by the Contractor in any other portion of the construction in which material of that quality would be acceptable. No deduction will be made from excavation quantities for rock so used.

4.13 Construction and Demolition Debris. Debris from any City awarded project, as well as Municipal Solid Waste (that is not recycled), shall be disposed of at the City's Solid Waste facilities.

4.14 Final Cleaning Up. Upon completion of the work and before acceptance and final payment, the Contractor shall clean the street, borrow pits, and all ground occupied by Contractor in connection with the work of all rubbish, excess materials, falsework, temporary structures, and equipment, and all parts of the work, shall be left in a neat and presentable condition.

When required in the plans, the Contractor shall, at Contractor's expense, replace waste material or stripping back into borrow and material pits as directed by the Engineer. Trees, tree stumps and material placed on property adjacent to the street during the execution of the work shall be disposed of by the Contractor.

4.15 Right-of-way. Right-of-way for the work will be provided without cost to the Contractor. Right-of-way will be made available to the Contractor on or before the date specified for the commencement of the work unless a later date for the right-of-way to be made available to the Contractor is designated in the contract documents.

4.16 Railroad Crossings. Whenever the work involves construction with which railroad companies are concerned, the performance of the work is contingent upon arrangements with the railroad companies for the proposed construction. No claims will be allowed for loss or damage caused by failure to complete such arrangements.

4.17 Safety and Health Regulations for Construction. Occupational Safety and Health Standards for the Construction Industry (29 CFR Part 1926) with amendments as of February 1, 1999 promulgated by the Occupational Safety and Health Administration, United States Department of Labor, Washington, D.C. are incorporated herein as a part of the contract documents.

SECTION 5 - CONTROL OF WORK

5.01 Authority of Engineer. The Engineer will have general supervision of the work and will decide any questions that arise with reference to the intent of the contract documents and compliance therewith. Said Engineer will relay all questions relating to materials, work, progress, disputes and mutual rights between contractors, fulfillment of contract, and compensation, in accordance with the provisions of these specifications.

5.02 Plans and Working Drawings. The approved plans will be supplemented by such working drawings as are necessary to adequately control the work. It is mutually agreed that all authorized alterations affecting the requirements and information given in the approved plans shall be in writing.

Working drawings for any structure shall consist of such detailed plans as may be required of the Contractor for the prosecution of the work. These are not included in the plans

furnished by the Engineer. They shall include shop details, erection plans, masonry, and form work. The Engineer's prior approval of the shop details must be obtained before any fabrication work involving these plans is performed. Erection plans, masonry layout diagrams, and plans for cribs, cofferdams, falsework, centering, and form work, as well as any other working drawings not previously mentioned, may be required of the Contractor and shall be subject to the Engineer's approval.

No changes shall be made in any plan or drawing after it has been approved except by consent or direction of the Engineer in writing. It is expressly understood that the approval by the Engineer of the Contractor's working drawings will not relieve the Contractor from any responsibility.

The contract price shall include the cost of furnishing all working drawings, and the Contractor will be allowed no extra compensation for such drawings.

Shop plans shall be made on 22"x36" sheet with ½" margin on all sides except the left which shall be 2". The margin lines shall measure 21"x33 ½". The marking shall be in accordance with the special plans or as may be required by the Engineer. All blueprint plans which are furnished to the Engineer shall be clear and distinct and acceptable to the Engineer and shall be neatly trimmed. The Contractor shall furnish the Engineer as many extra copies of working drawings as the Engineer may direct.

The Engineer may require reproducible prints of all approved shop plans, which shall be furnished by the Contractor without cost to the Engineer. Such reproducible prints shall not be folded but shall be mailed in tubes sized to accommodate these plans without injuring them. No preliminary working drawings will be accepted by the Engineer unless they have been carefully checked by the Contractor. Drawings showing gross errors will be returned for recheck before examination by the Engineer. The name of the shop or company furnishing the drawings shall be on the tracing.

5.03 Alteration of Plans or of Character of Work. The Engineer shall have the right to make alterations in plans or character of work as may be considered necessary or desirable during the progress of the work to satisfactorily complete the proposed construction. Such alterations shall not be considered as a waiver of any conditions of the contract or invalidate any of the provisions thereof.

5.04 Coordination of Plans, Specifications, Special Provisions, and Supplemental Specifications. These specifications, the supplemental specifications, the plans, special provisions, and all supplementary documents are essential parts of the contract, and a requirement occurring in one is as binding as though occurring in all. They are intended to be complementary and to describe and provide for a complete work. In case of discrepancy, figured dimensions shall govern over scaled dimensions, plans shall govern over specifications, special plans shall govern over standard plans, supplemental specifications shall govern over standard specifications, and special provisions shall govern over specifications, supplemental specifications, and the plans.

5.05 Cooperation of Contractor. The Contractor will be supplied with a minimum of two sets of approved plans and contract assemblies, including special provisions, one set of which the Contractor shall keep available on the work at all times.

The Contractor shall give the work the constant attention necessary to facilitate the progress thereof and shall cooperate with the Engineer and other contractors in every way possible.

The Contractor shall at all times have at the work site, as Contractor's agent, a competent superintendent capable of reading and thoroughly understanding the plans and specifications, thoroughly experienced in the type of work being performed, who shall receive

instructions from the Engineer or Engineer's authorized representatives. The superintendent shall have full authority to execute the orders or directions of the Engineer without delay, and to promptly supply materials, equipment, tools, labor, and incidentals as may be required. Such superintendence shall be furnished irrespective of the amount of work sublet.

5.06 Surveys. Lines and elevations shall be established by the Engineer before the work commences and the Contractor shall obtain lines and elevations from the points so set by the Engineer. The Contractor shall furnish all stakes necessary for lines and elevations and cooperate with the Engineer in setting same.

5.07 Authority and Duties of Inspector. The City may appoint inspectors to represent the Engineer in the inspection of all materials used in and all work done under the contract. Such inspection may extend to any part of the work and to the preparation or manufacture of the materials to be used. The inspector will not be permitted to modify in any way the provisions of the contract documents, nor to delay the work by failing to inspect materials and work with reasonable promptness. An inspector is placed at the work site to keep the Engineer informed as to its progress and the manner in which it is being done and to call the Contractor's attention to any infringements of the contract documents. The inspector will not act as foreman or perform other duties for the Contractor nor improperly interfere with the management of the work. They will not be authorized to approve or accept any portion of the work. In case of dispute between the Contractor and the inspector as to quality of materials or the manner of performing the work, the inspector shall have the authority to reject materials or suspend the work until the question at issue can be decided by the Engineer. Written notice of the suspension of work will be given to the Engineer and the Contractor.

5.08 Inspection of Work. The Contractor shall furnish the Engineer with every reasonable facility for ascertaining whether the work is being performed in conformance with the contract documents. At any time before acceptance of the work, upon request of the Engineer, the Contractor shall remove or uncover such portions of the finished work as the Engineer may direct. After examination has been made, the Contractor shall restore such portions of the work to the standard required by the contract documents.

If the work thus exposed or examined proves acceptable, the uncovering or removing and replacing of the covering or the restoring of the parts removed shall be paid for as extra work, except that no payment will be made for the work involved in checking the smoothness of pavement surfaces. If the work thus exposed and examined proves unacceptable, the Contractor shall replace the defective work in accordance with the specifications and will be paid only the contract price for the work as finally accepted. Work done or materials used without the Engineer having been afforded ample opportunity to provide suitable inspection may be ordered removed and replaced at the Contractor's expense or may be excluded from the quantities measured for payment.

5.09 Removal of Defective Work. Any defective work shall be removed and replaced at the Contractor's expense. Should the Contractor fail or refuse to remove defective work when so ordered by the Engineer, the Engineer shall have authority to order the Contractor to suspend further operations and may withhold payment on estimates until such defective work has been removed and replaced in accordance with the plans and specifications. Continued failure or refusal on the part of the Contractor to correct defective work promptly shall be sufficient cause for the City to declare the contract in default and to proceed to have the work completed in accordance with these specifications under section entitled Abrogation.

5.10 Final Inspection. Upon notification by the Contractor or Contractor's authorized representative that the work is completed, the Engineer shall make prompt final inspection of each item of work included in the contract. If the work is found to not be in accordance with the contract documents, the Contractor will be advised as to the particular defects to be remedied.

SECTION 6 - CONTROL OF MATERIALS

6.01 Source of Supply and Quality Requirements. The materials used on the work shall meet all quality requirements of the contract. In order to expedite the inspection and testing of materials, the Contractor shall notify the Engineer of Contractor's proposed sources of materials prior to delivery. At the option of the Engineer, approval of the source or approval of materials at the source prior to delivery may be required. If it is found after trial that sources of supply for previously approved materials do not produce specified products or when conditions are such that the use of unfit materials cannot be prevented except by extraordinary inspection methods, the Contractor shall
furnish materials from other sources. Before delivery is started and at any time during the process of preparation and use, the materials shall be subject to the approval of the Engineer.

6.02 Methods of Sampling and Testing, and Cited Specifications. Sampling and testing of all materials and the laboratory methods and testing equipment required under these specifications shall be in accordance with the latest published standard method of the AASHTO, except as otherwise provided.

The sampling and testing of all materials not covered by the AASHTO, but not otherwise provided for, shall conform to the latest published standard or tentative methods of the ASTM.

6.03 Storage of Materials. The Contractor shall be responsible for the care and storage of materials delivered at the work site or purchased for use thereon. Any material that has been delivered to the work site and has become damaged before actual incorporation in the work may be rejected by the Engineer even though it may previously have been accepted. Stored materials shall be so located as to facilitate thorough inspection.

6.04 Unacceptable Materials. All materials not conforming to the requirements of the specifications at the time they are to be used shall be considered as unacceptable, and all such materials will be rejected and shall be removed immediately from the site of the work unless otherwise instructed by the Engineer. No rejected materials, the defects of which have been corrected, shall be used until approval has been given.

6.05 Guarantee. The Contractor shall be responsible for any and all defects which may develop in any part of the entire installation furnished by said Contractor and, upon receipt of written notice from the Engineer, shall immediately replace and make good without expense to the City any such faulty part or parts and damage done by reason of same during a period of one (1) year from the date of formal acceptance of the installation (except when specific guarantee for another length of time is elsewhere specified).

The acceptance of the installation, or any part of it, shall not act to waive this liability on the part of the Contractor.

Upon completion and formal acceptance of the work, the Contractor may furnish a satisfactory bond in an amount of fifteen percent (15%) of contract price to insure the provisions of this guarantee. Otherwise, the original bond shall remain in full force and effect until final acceptance of the work, which acceptance shall be made one (1) year after the formal acceptance of the work as provided herein.

6.06 "Or Equal" Clause. Whenever, in any section of the contract documents, plans, or specifications, any article, material, or equipment is defined by describing a proprietary product or by using the name of a manufacturer or vendor, the term "or approved equal", if not inserted, shall be implied. The specific article, material, or equipment mentioned shall be understood as indicating the type, function, minimum standard or design, efficiency, and quality desired and shall not be construed in such a manner as to exclude manufacturer's products of comparable quality, design, and efficiency. The Engineer shall determine the acceptability of articles, materials, or equipment proposed as equals.

SECTION 7 - LEGAL RELATIONS AND RESPONSIBILITY TO THE PUBLIC

7.01 Laws to be Observed. The Contractor shall keep fully informed of and, at all times, shall observe and comply with all Federal and State laws, all local bylaws, ordinances, and regulations, and all orders and decrees of bodies or tribunals having any jurisdiction or authority which in any manner affect those engaged or employed on the project, or which in any way affect the project. The Contractor shall protect and indemnify the City and its representatives against any claim or liability arising from or based on the violation of any such law, ordinance, regulation, order, or decree, whether by said Contractor or Contractor's employees. It shall be the responsibility of the Contractor to provide all safeguards, safety devices, and protective equipment and to take any other needed actions as are reasonably necessary to protect the life and health of employees on the project.

7.02 State and City Fair Labor Standards. The Contractor agrees to comply with all applicable State and City fair labor standards in the execution of the contract, including compliance with Section 73-102, R.R.S. 1943. The Contractor further agrees to comply with the provisions of Section 48-657, R.R.S. 1943, pertaining to contributions to the Unemployment Compensation Fund of the State of Nebraska. In addition, the Contractor agrees to comply with the provisions of Section 52-118, R.R.S. 1948, pertaining to payment of all labor performed and for payment for materials and equipment rental which is actually used in performing this contract.

7.03 Anti-discrimination. During the performance of the work, the Contractor agrees not to discriminate against any employee or application for employment because of race, color, age, religion, sex, or national origin.

7.04 Permits. The Contractor shall procure and pay for all permits, licenses, and bonds necessary for the prosecution of Contractor's work and/or required for municipal, State, and Federal regulations and laws.

7.05 Patents. The Contractor and the surety in all cases shall indemnify and save harmless the City for any costs, expenses, and damages which it may be obligated to pay by reason of any such infringement at any time during the prosecution of or after the completion of the project.

7.06 Restoration of Surfaces Opened by Permit. Upon the presentation of a duly authorized and satisfactory permit from the City which provides that all necessary repair work will be paid for by the party to whom such permit is issued, the Engineer may authorize the Contractor to allow parties bearing such permits to make openings in the street. The Contractor shall, when ordered by the Engineer in writing, make in an acceptable manner all necessary repairs due to such openings, and such necessary work ordered by the Engineer shall be paid for on the basis of "Extra Work" as provided for in these specifications and shall be subject to the same conditions as original work performed.

7.07 Safety, Health, and Sanitation. In the performance of the contract, the Contractor shall comply with all applicable Federal, State, and local laws governing safety, health, and sanitation. The Contractor shall furnish such additional safeguards, safety devices, and protective equipment and shall take actions as the Engineer may determine as being reasonably necessary to protect the life and health of Contractor's employees and the public.

7.08 Barricades and Warning Signs. Except as otherwise provided specifically in this section, the Contractor shall provide and maintain barricades, danger and warning signs, and suitable and efficient lights, and shall take every reasonable precaution to prevent accidents. The name of the Contractor shall be clearly visible on the barricades. The Contractor shall provide, at their own expense, such watchmen as are necessary to protect their equipment and to maintain proper lights.

Watchmen who may be necessary to direct traffic or prevent travel on any portion of the street shall be provided by the Contractor on written order from the Engineer. Unless the contract specifically provides that such watchmen are to be furnished by the Contractor, this expense shall be paid for as provided in "Extra Work."

7.09 Use of Explosives. When the use of explosives is necessary for the prosecution of the work, the Contractor shall use the utmost care not to endanger life or property. All explosives shall be stored in a secure manner, and storage places shall be clearly marked "DANGER--EXPLOSIVES."

7.10 Claims for Labor and Materials. The Contractor shall indemnify and save harmless the City from all claims for labor and materials furnished under this contract. When requested by the City, the Contractor shall submit satisfactory evidence that all persons, firms, or corporations who have done work or furnished materials under this contract, for which the City may become liable under the laws of the State, have been fully paid or satisfactorily secured. In case such evidence is not furnished or is not satisfactory, an amount will be retained from money due the Contractor which, in addition to any other sums that may be retained, will be sufficient, in the opinion of the City, to meet all claims of the persons, firms, and corporations as aforesaid. Such sum shall be retained until the liabilities as aforesaid are fully discharged or satisfactorily secured.

7.11 Contractor's Insurance. The Contractor shall secure and maintain throughout the duration of this contract insurance, from companies authorized to do business in Nebraska, of such types and in such amounts as may be necessary to protect themselves and the interests of the City against all hazards or risks of loss as hereinafter specified. This insurance shall cover all aspects of the Contractor's operations and completed operations. The form and limits of such insurance, together with the underwriter thereof in each case, shall be approved by the City, but regardless of such approval it shall be the responsibility of the Contractor to maintain adequate insurance coverage at all times. Failure of the Contractor to maintain adequate coverage shall not relieve them of any contractual responsibility or obligation. Minimum insurance coverage shall be the amounts stated herein or the amounts required by applicable law, whichever are greater.

1. "Worker's Compensation and Employer's Liability." This insurance shall protect the Contractor against all claims under applicable State worker's compensation laws. This insurance shall provide coverage in every state in which work for this project might be conducted. The Contractor shall also be protected against claims for injury, disease, or death of employees which, for any reason, may not fall within the provisions of a worker's compensation

law. This policy shall include an "all states" endorsement. The liability limits shall be not less than the following:

Worker's Compensation	Statutory Limits
Employer's Liability	$100,000 each accident
	$100,000 each employee
	$500,000 policy limit

2. "Business Automobile Liability." This insurance shall be written in comprehensive form and shall protect the Contractor, Contractor's employees, or subcontractors from claims due to the ownership, maintenance, or use of a motor vehicle. The liability limits shall be not less than the following:

Bodily Injury & Property Damage	$500,000 Combined Single Limit

3. "Comprehensive General Liability." The comprehensive general liability coverage shall contain no exclusion relative to explosion, collapse, or underground property. The liability limits shall be not less than the following:

Bodily Injury & Property Damage	$ 500,000 each occurrence
	$1,000,000 aggregate

4. "Umbrella Liability Insurance." This insurance shall protect the Contractor against claims in excess of the limits provided under employer's liability, comprehensive automobile liability, and commercial general liability policies. The umbrella policy shall follow the form of the primary insurance, including the application of the primary limits. The liability limits shall not be less than the following:

Bodily Injury & Property Damage	$1,000,000 each occurrence
	$1,000,000 general aggregate

5. Additional Requirements. The City may require insurance covering a Contractor or Subcontractor more or less than the standard requirements set forth herein depending upon the character and extent of the work to be performed by such Contractor or Subcontractor.

Insurance as herein required shall be maintained in force until the City releases the Contractor of all obligations under the contract.

The Contractor shall provide and carry any additional insurance as may be required by special provisions of these specifications.

6. Certificate of Insurance. Satisfactory certificates of insurance shall be filed with the City prior to starting any work on this contract. The certificates shall show the City as an additional insured on all coverage except Workers Compensation. The certificate shall state that thirty (30) days written notice shall be given to the City before any policy is cancelled (strike the "endeavor to" wording often shown on certificate forms). If the Contractor cannot have the "endeavor to" language stricken, the Contractor may elect to provide a new certificate of insurance every thirty (30) days during the contract. The Contractor shall immediately notify the City if there is any reduction of coverage because of revised limits or claims paid which affect the aggregate of any policy.

7.12 Proof of Carriage of Insurance. Satisfactory certificates of insurance shall be filed with the City prior to starting any construction work on this contract. The certificates shall show the City as "Additionally Insured." The certificates shall state that thirty (30) days written notice shall be given to the City before any policy covered thereby is changed or canceled (strike the “endeavor to” wording often shown on certificate forms).

7.13 Contractor's Responsibility for Utility Property and Services. At points where the Contractor's operations are adjacent to properties of railway, telegraph, telephone, and power companies or adjacent to other property to which damage might result, work shall not be commenced until all arrangements necessary for the protection thereof have been made.

The Contractor shall cooperate with the owners of any underground or overhead utility lines in their removal and rearrangement operations in order that these operations may progress in a reasonable manner, that duplication of rearrangement work may be reduced to a minimum, and that services rendered by those parties will not be unnecessarily interrupted.

In the event of interruption to water or utility services as a result of accidental breakage or as result of being exposed or unsupported, the Contractor shall promptly notify the proper authority. Contractor shall cooperate with said authority in the restoration of service as promptly as possible. In no case shall interruption to water service be allowed to exist outside of working hours. Fire hydrants shall be kept accessible to the Fire Department at all times and no materials shall be kept or stockpiled within fifteen (15) feet of any fire hydrant.

The Contractor must cooperate with the utility companies and schedule work in such a manner as to protect the existing utility facilities until the facilities are abandoned or replacement facilities are completed. In instances where partial grading is necessary before a utility can install its facilities, the Contractor shall consult with the utility and plan the work so reasonable time can be allowed the utility for completing its work.

7.14 No Waiver of Legal Rights. The City shall not be precluded or estopped by any measurement, estimate, or certificate made either before or after the completion and acceptance of the work and payment therefor from showing the true amount and character of the work performed and materials furnished by the Contractor, nor from showing that such measurement, estimate, or certificate is untrue or is incorrectly made, nor that the work or materials do not in fact conform to the contract. The City shall not be precluded or estopped, notwithstanding any such measurement, estimate, or certificate and payment in accordance therewith, from recovering from the Contractor or Contractor’s sureties, or both, such damage as it may sustain by reason of Contractor’s failure to comply with the terms of the contract. Neither the acceptance by the City or any representative of the City, nor any payment for or acceptance of the whole or any part of the work, nor any extension of time, nor any possession taken by the City shall operate as a waiver of any portion of the contract or of any power herein reserved or of any right to damages. A waiver of any breach of the contract shall not be held to be a waiver of any other or subsequent breach.

7.15 Exposure of Pipe or Manholes. The Contractor shall conduct the work at all times in such a manner as will insure no disruption to the normal function of the sanitary sewer collection system. Particular attention shall be paid to the threat of introduction of storm water or other waters to the piping and manholes of the collection system. The Contractor shall take whatever precautions are necessary, such as, but not limited to installation of plugs in exposed pipes and manholes when work is not in progress or when leaving the work site. The Contractor will be held responsible for damages which may occur to either the collection system or to private property through introduction of storm water or other waters to exposed piping or manholes relating to the construction work.

SECTION 8 - PROSECUTION AND PROGRESS

8.01 Subletting or Assigning of Contract. The Contractor will not be permitted to sublet, assign, sell, transfer, or otherwise dispose of the contract or any portion thereof or Contractor's right, title, or interest therein or to either legally or equitably assign any of the money payable under Contractor's contract or claim thereto without the written consent of Contractor's surety and the Engineer. The Contractor will not be relieved of any responsibility through any of the above actions.

8.02 Prosecution of Work. The bid for each project will show the contract period. The progress of the work shall be at a rate sufficient to complete the contract within the contract period. If it appears that the rate of progress is such that the contract will not be completed within the contract period or if the work is not being executed in a satisfactory and workmanlike manner, the City may order the Contractor to take such steps as it considers necessary to complete the contract within the period of time specified or to prosecute the work in a satisfactory manner. If the Contractor fails to comply with such order within two (2) weeks after receipt of the order, Contractor shall automatically be disqualified from receiving any additional contract awards, and the City shall have the right to declare the contract in default and to complete the work in accordance with these specifications under section entitled Abrogation.

The Contractor's sequence of operations shall be such as to cause as little inconvenience to the general public as possible.

The Contractor will be granted additional and suitable time for the prosecution of the work, as was lost by reason of a delay or delays attributable to other parties authorized to do work on the project over which the Contractor had no control or jurisdiction, as provided in these specifications under section entitled Extension of Contract Period.

8.03 Limitations of Operations. The Contractor shall conduct the work at all times in such a manner and in such sequence as will insure the least interference with traffic. Contractor shall have due regard to the location of detours and to the provisions of handling traffic. Contractor shall not open up work to the prejudice of work already started, and the Engineer may require the Contractor to finish a section on which work is in progress before work is started on any additional section. The Contractor shall so conduct operations and maintain the work in such condition that adequate drainage shall be in effect at all times.

8.04 Methods and Equipment. The methods, equipment, and appliances used shall produce a satisfactory quality of work and shall be adequate to maintain the schedule of progress specified. Equipment used on any portion of the project shall be such that no injury to the roadway, adjacent property, or other streets will result from its use.

When the methods and equipment to be used by the Contractor in accomplishing the construction are not prescribed in the contract, the Contractor is free to use any methods or equipment that is demonstrated to accomplish the contract work in conformity with the requirements of the contract to the satisfaction of the Engineer.

When the contract specifies that the construction be performed by the use of certain methods and equipment, such methods and equipment shall be used unless others are authorized by the Engineer. If the Contractor desires to use a method or type of equipment other than those specified in the contract, a request may be made to the Engineer for authority to do so. The request shall be in writing and shall include a full description of the methods and equipment proposed to be used and an explanation of the reasons for desiring to make the change. If approval is given, it will be on the condition that the contractor will be fully responsible for producing construction work in conformity with contract requirements. If, after trial use of the substituted methods or equipment, the Engineer determines that the work produced does not

meet contract requirements, the Contractor shall discontinue the use of the substitute method or equipment and shall complete the remaining construction with the specified methods and equipment. The Contractor shall remove the deficient work and replace it with work of specified quality or take such other corrective action as the Engineer may direct. No change will be made in basis of payment for the construction items involved nor in contract time as result of authorizing a change in methods or equipment under these provisions.

8.05 Temporary Suspension of Work. Work shall be suspended wholly or in part when, in the opinion of the Engineer, weather or other conditions are unfavorable to its satisfactory prosecution. Work shall also be suspended at the direction of the Engineer pending settlement of disputes arising out of failure of the Contractor to comply with the provisions of the contract. Written notice of suspension of work shall be given by the Engineer. When the conditions causing suspension no longer exist, such written notice shall be given to the Contractor by the Engineer. Promptly after such written notice, the Contractor shall resume prosecution of the work as provided in these specifications under section entitled Prosecution of Work.

8.06 Liquidated Damages. Time is an essential element of the contract, and it is important that the work be pressed vigorously to completion.

For each calendar day that any work shall remain uncompleted after the end of the contract period, the amount per calendar day specified in the bid form will be assessed, not as a penalty but as predetermined and agreed liquidated damages. The City will prepare and forward to the Contractor an invoice for such liquidated damages. The final payment will be withheld until payment shall have been made of this invoice.

Due account shall be taken of any adjustment of the contract period granted under the section of these specifications entitled Extension of Contract Period.

The assessment of liquidated damages for failure to complete the work within the contract period shall not constitute a waiver of the City's right to collect any additional damages which the City may sustain by failure of the Contractor to carry out the terms of the contract.

8.07 Extension of Contract Period. An extension of the contract period may be granted by the City for any of the following reasons:

1. Additional work resulting from a modification of the plans for the project
2. Delays caused by the City
3. Other reasons beyond the control of the Contractor which, in the City's judgment, would justify such extension.

No extension of contract period will be allowed for variations between contract quantities and actual quantities which cannot be predetermined and which amount to less than twenty percent (20%) of the contract quantities.

8.08 Abrogation. If the Contractor abandons, sublets, or assigns the work under this contract without the consent of the City, or if Contractor fails to give - personal attention to it, or if it is the Engineer's opinion, and is so certified in writing to the Contractor and the City, that the Contractor is violating any of the provisions of this contract or that Contractor is not prosecuting the work in good faith or at the rate of progress specified, or that Contractor has unnecessarily or unreasonably delayed or neglected the work or any part of it, written notice to that effect is to be given to the Contractor by the Engineer. After such notice, no materials or equipment shall be removed from the work. If, within five (5) days thereafter, the Contractor does not take steps, which in the judgment of the Engineer will insure the satisfactory completion of the work, then the City may declare this contract null and void and the security forfeited and may notify the Contractor in writing to discontinue the work or any part of it; thereupon ceasing the Contractor's right of possession of the ground and of all materials and equipment thereon. The City then, at

their option, may enter upon and take possession of the work with all materials, supplies, and equipment remaining thereon and by contract or otherwise, as the City may determine, may complete the work or the part of it designated and charge the expense thereof to the Contractor using any materials or equipment found on the site. The expense so charged, together with all damages incurred, will be deducted from any funds due or to become due under this contract and, should the unexpended balance of these funds be insufficient, the excess shall be at the cost of the Contractor and sureties on the Contractor's bond. Neither completion of a part of the work nor the extension for any reason of the time of the completion of the work is to be considered a waiver of this right to abrogate the contract for abandonment, delay, or unsatisfactory work.

8.09 Termination of Contractor's Responsibility. The contract shall be considered completed when the work has been accepted in writing by the City. Such acceptance shall release the Contractor from all further obligation with respect thereto, except as to conditions and requirement set forth in Contractor's bond.

SECTION 9 - MEASUREMENT AND PAYMENT

9.01 Payments. Payments for estimated work completed will be made only on certificates of the Engineer at a regular City Council meeting.

The City, at its discretion, may include in such estimates payments for materials that will eventually be incorporated in the project, provided that such materials are suitably stored on the site of the project at the time of preparing estimates for payment. Such payment is to be based upon the estimated value thereof as ascertained by the Engineer. Such material when so paid for by the City shall not be removed from the project without consent of the City and, in case of default on the part of the Contractor; the City may use or cause to be used by others these materials in construction of the project.

The City will retain five percent (5%) of the estimated amount of work executed in an approved manner and of the approved materials and apparatus suitably stored on the site.

Payment of the retained five percent (5%) will be made within sixty (60) days after the formal approval and acceptance by the Engineer of all apparatus, materials, and work embraced in the contract.

9.02 Payments Withheld. The City may withhold or, on account of subsequently discovered evidence, nullify the whole or a part of any certificate to such extent as may be necessary to protect itself from loss on account of:

1. Defective work not remedied
2. Claims filed or reasonable evidence indicating probable filing of claims
3. Failure of the Contractor to make payments properly to subcontractors or for materials or labor
4. A reasonable doubt that the contract can be completed for the balance then unpaid
5. Damage to another contractor.

When the above grounds are removed, payment shall be made for amounts withheld because of them.

9.03 Acceptance and Final Payment. If final inspection reveals that all details of the work have been completed satisfactorily, the Engineer shall tentatively accept the work, in writing, relieving the Contractor of further responsibility for the care and maintenance of the completed work and, provided that all equipment and materials have been removed from the right-of-way, shall also relieve the Contractor of further public liability. As soon as possible after tentative

acceptance of the work, the Engineer shall measure the completed work and compute the quantities of work for which payment is to be made. Before final settlement is made, the City shall be satisfied with the completed work. When the Engineer is satisfied that all items of the work have been found to be consistent with the terms of the contract and specifications, a final estimate including the retained percentage due the Contractor shall be released for payment. Release of the final estimate shall constitute final acceptance of the work.

All prior partial estimates and payments shall be subject to correction in the final estimate and payment.

Extra work - See these specifications under section entitled Extra Work.

9.04 Payment for Extra Work. The Contractor will receive and accept payment for work performed under the contract as follows:

1. Items of work performed which are covered by definite prices stipulated in the contract. For all items of work performed which are covered by definite unit prices or lump sum amounts specified in the contract, the Contractor shall receive and accept compensation at the rate specified in the contract.

2. Extra work ordered by the Engineer, of a quality or class not covered by the contract, will be paid for at an agreed price. For extra work ordered by the Engineer and performed on an agreed price basis, the Engineer and the Contractor shall enter into a written agreement, and have City Council approval, before such work is undertaken. This written agreement shall describe the extra work that is to be done and shall specify the agreed price or prices therefore.

Revised 1-25-2011

DIVISION II

PORTLAND CEMENT CONCRETE PAVEMENT

DIVISION II
PORTLAND CEMENT CONCRETE PAVEMENT

C O N T E N T S

Section	Description
10	**SCOPE OF WORK**
11	**MATERIALS**
11.04	Cement--47-B (Modified) and ABX (Modified) Concrete
11.02	Portland Cement
11.03	Mixing Water
11.04	Fine Aggregate for 47-B (Modified) Concrete
11.05	Coarse Aggregate for 47-B (Modified) Concrete
11.06	Aggregate for ABX (Modified) Concrete
11.07	Granular Foundation Course
11.08	Joint Filler
11.09	Joint Sealing Material
11.10	Curing Compound
12	**CONSTRUCTION METHODS**
12.01	Clearing and Grubbing
12.02	Site Preparation **Revised 1-18-2010**
12.03	Subgrade Preparation
12.04	Water Main and Sanitary Sewer Pipe Bedding and Backfill
12.05	Granular Foundation Course
12.06	Surplus Earth
12.07	Adjustment of Manholes **Revised 1-18-2010**
12.08	Adjustment of Storm Sewer Inlets
12.09	Integral Curb
13	**CONCRETE CONSTRUCTION**
13.01	Forms and Form Setting
13.02	Air Entraining
13.03	Consistency
13.04	Mixing
13.05	Placing and Finishing
13.06	Surface Test
13.07	Headers
13.08	Transverse Construction Joints
13.9	Transverse Expansion Joints
13.10	Transverse Contraction Joints
13.11	Longitudinal Joints
13.12	Curing
13.13	Sealing of Joints
13.14	Protection
13.15	Opening to Traffic
13.16	Acceptance

Section	Description
14	**METHOD OF MEASUREMENT AND BASIS OF PAYMENT**
14.01	Clearing and Grubbing
14.02	Site Preparation
14.03	Grading, Surplus Earth, Embankment
14.04	Granular Foundation Course
14.05	Manholes
14.06	Storm Sewer Inlets
14.07	Integral Cub
14.08	Concrete Pavement
14.09	Beams
14.10	Headers
14.11	Transverse Expansion and Miscellaneous Joints
14.12	Concrete Test Cylinders
14.13	Testing
14.14	Miscellaneous

DIVISION II
PORTLAND CEMENT CONCRETE PAVEMENT

SECTION 10 - SCOPE OF WORK

The work covered by this division of the specifications consists of furnishing all labor, plant, equipment, appliances, and materials and performing all operations necessary to construct and complete concrete pavement and appurtenances in strict accordance with these specifications, the applicable drawings, and subject to the terms and conditions of the contract.

SECTION 11 - MATERIALS

11.01 Cement - 47-B (Modified) and ABX (Modified) Concrete. The specifications for 47-B (Modified) and ABX (Modified) concrete shall be as specified in Section 1002 "Portland Cement Concrete" of the most current State of Nebraska Department of Roads Standard Specifications for Highway Construction with the following exceptions.

1. Paragraph 1 of Section 1002.04 is deleted and the following added:

For 47-B (Modified) concrete no more than 50 lbs. of total water will be added for each 100 lbs. of cement (water to cement ratio not to exceed 0.50). For ABX (Modified) concrete no more than 47 lbs. of total water will be added for each 100 lbs. of cement (water to cement ratio not to exceed 0.47).

Concrete with water to cement ratios greater than specified above will be rejected. If any water is added to the concrete at any time without the permission of the Engineer, the concrete will be rejected.

2. Portland Cement Concrete for pavement shall meet the following requirements:

Class of Concrete	Compressive Strength Requirements in Pounds per Square Inch	
	7 days	28 days
47-B (Modified)	2100	3600
ABX (Modified)	2300	3800

11.02 Portland Cement. Shall be as specified in Section 1004 "Portland Cement" of the most current Nebraska Department of Roads specifications.

11.03 Mixing Water. Shall be as specified in Section 1005 "Water for Concrete" of the most current Nebraska Department of Roads specifications.

11.04 Fine Aggregate for 47-B (Modified) Concrete. Shall be as specified in Section 1033 "Aggregates", Table 1033.02A "Gradation Limits" of the most current Nebraska Department of Roads specifications.

11.05 Coarse Aggregate for 47-B (Modified) Concrete. Shall be as specified in Section 1033 "Aggregates", Table 1033.03A, of the most current Nebraska Department of Roads specifications.

11.06 Aggregate for ABX (Modified) Concrete. Shall be as specified in Section 1033 "Aggregates" of the most current Nebraska Department of Roads specifications with below noted additions.

It shall be the responsibility of the Contractor to submit test results conforming to ASTM C295 that indicate the aggregate to be used in ABX Modified concrete is non-reactive with the alkalis in cement. If the results of this test are not conclusive, then results shall be submitted that conform to ASTM C227 (Mortar Bar) which remove all doubt as to the acceptability of the aggregate for Portland cement concrete.

These results must be submitted prior to any concrete being used from any source of aggregate. New test results must be submitted each time the aggregate comes from a new source or for each 700 cubic yards of concrete poured.

In the event that non-reactive aggregate is not available, the Contractor will not be allowed to use the sand-gravel mix but will be required to use 47-B Modified Portland cement concrete as specified in these specifications under section entitled Cement - 47-B (Modified) and ABX (Modified) Concrete.

11.07 Granular Foundation Course. The granular materials shall be sand from local pits that are shown on the plans, or it may be a coarse sand, fine sand, loamy soil, or any mixture of any of these materials that conforms to the following requirements:

	Minimum	Maximum
Total Percent Retained on #200 Sieve	80	92
Plasticity Index		6

11.08 Joint Filler. Joint filler shall consist of premoulded bituminous fiber uniformly impregnated with between 35% and 50% durable asphalt by weight and be furnished in strips of the dimensions specified in the plans. A one (1) inch thick sample when compressed to 50% of original thickness at rate of 1/10 inch per minute and released shall show at least 70% recovery within one hour after compression and shall not have required more than 500 pounds per square inch compression load and extrusion of not more than 1/8 inch.

11.09 Joint Sealing Material. The hot pour joint material shall be of the rubber-asphalt type and shall be melted in a double jacket kettle equipped with an agitator for stirring the material during melting and pouring. The rubber-asphalt shall meet Federal Specification SS-S-164 or subsequent revisions.

11.10 Curing Compound. The curing compound shall consist of a nonbituminous pigmented liquid conforming to AASHTO Designation M148-49 or subsequent revisions.

SECTION 12 - CONSTRUCTION METHODS

12.01 Clearing and Grubbing. Except for trees, shrubs, and grasses which are to be preserved as indicated on the plans or as designated by the Engineer, all trees, stumps, hedges, shrubs, weeds, grass, other herbaceous vegetation, and rubbish shall be removed from the right-of-way and from borrow pits furnished by the contracting authority. This work shall be classified as follows:

Clearing shall consist of the cutting, removal, and disposal of trees six (6) inches or more in diameter.

Grubbing shall consist of the removal and disposal of stumps, including roots.

Hedge removal shall consist of the pulling or grubbing and disposal of hedges or other shrubs planted close together in rows. If any individual tree of those composing a hedge has a diameter greater than four (4) inches, it shall be measured separately as a tree.

Weed and rubbish removal shall consist of the removal and disposal of all weeds, grass, other herbaceous vegetation, and all rubbish encountered on the work.

12.02 Site Preparation. This work shall consist of removal and disposal of all crosswalks, private walks, driveway approaches, curbs, curb and gutter, and headers as indicated on the plans or as directed by the Engineer.

Topsoil shall be carefully removed and deposited in storage piles convenient to the area which will subsequently receive topsoil. Topsoil shall be kept separate from other excavated materials and shall be piled free from roots, stones, and other undesirable materials.

The backfill over all existing utility lines shall be consolidated when shown on the plans or directed by the Engineer. This shall be done by water jetting and vibration to the full depth of the utility lines unless other methods are approved by the Engineer. When compaction over existing utility lines is not shown on the plans or is not a bid item and is directed to be done by the Engineer, the work shall be negotiated for in writing before any work is commenced and will be paid for as a single unit.

All sanitary and storm sewers will be televised before a street is paved or repaved to insure that the street will not have to be torn up to repair the sewer in the near future.

Revised 1-18-2010

12.03 Subgrade Preparation. All paving subgrade shall be brought to the exact lines, grades, and cross sections shown on the plans or as directed by the Engineer.

The subgrade shall be constructed to have a uniform density throughout its entire width. All soft or yielding material and other portions of the subgrade which will not compact readily shall be removed as directed. All hollow places, settlements, or other imperfections shall be filled with approved material and compacted.

In all places where embankment may be required to bring the subgrade to the required height, it shall be constructed in horizontal layers not to exceed six (6) inches in depth before rolling. Each successive layer of material placed as described shall be wetted to within 3% of the optimum moisture content and compacted to at least 95% of the maximum dry density obtained at optimum moisture content as determined by AASHTO Method T99.

In all embankment areas where highly expansive soils are encountered, materials shall be wetted at one percent (1%) to three percent (3%) above optimum moisture.

In cuts when the undisturbed earth is suitable for the subgrade, manipulation other than rolling will not be required, provided the upper three (3) inches is at 95% maximum dry density as called for in embankments.

12.04 Water Main, Storm and Sanitary Sewer Pipe Bedding and Backfill. The pipe bedding and backfill shall be Type "C" as required by Division V, Pipe Bedding, Trench Backfill, and Nonshrinkable Backfill. The completion of the trench backfill under pavement shall be adequate to provide 95% of maximum dry density and shall be wetted to within 3% optimum moisture as specified in this division under Subgrade Preparation.

12.05 Granular Foundation Course. This work shall consist of the construction of a compacted foundation course of granular material to the lines, grade, and dimensions shown on the plans on a previously prepared and approved subgrade.

12.06 Surplus Earth. All surplus earth shall be stockpiled by the Contractor at the location or locations designated on the plans or as the Engineer shall direct.

12.07 Adjustment of Manholes. All manholes encountered whether shown on the plans or not shall be brought to the proper grade by removing the castings and adjusting the tops of the existing manholes by removal or addition of concrete or brick, as the case may be, and resetting the frames and covers.

Brick masonry shall consist of the type of brick satisfactory to the Engineer, laid in 1:2 cement mortar. All brick must be wetted before being laid. All joints shall be completely filled with mortar and shall not be less than 1/4 inch and not more than 1/2 inch in thickness.

Contractors are instructed to use plastic or concrete risers to bring manhole ring and covers to grade. Using pieces of wood, concrete or bricks and then filing with concrete mortar will no longer be accepted.

All manholes will be inspected before and after a concrete or asphalt street is laid down to insure that no foreign material is in the flow line or at the bottom of a manhole.

Revised 1-18-2010

12.08 Adjustment of Storm Sewer Inlets. All storm sewer inlets shall be adjusted to line and grade by removing the castings and adjusting the tops of the existing storm sewer inlets by removing or adding concrete or bricks, as the case may be, and resetting the castings.

Brick masonry shall consist of the type of brick satisfactory to the Engineer, laid in 1:2 cement mortar. All brick must be wetted before being laid. All joints shall be completely filled with mortar and shall not be less than 1/4 inch and not more than 1/2 inch in thickness.

12.09 Integral Curb. Integral curb shall be constructed on the edge of the concrete slab in accordance with the plans and typical cross section. This curb shall be placed immediately after the concrete on the pavement has been placed and finished and before it takes its initial set. That part of the pavement which is to be covered by the integral curb shall be cleaned of all laitance and shall be roughened. Integral Curb will be required on all new pavement construction. If construction is a very short section, the Director of Public Works may allow an exception upon written request.

SECTION 13 - CONCRETE CONSTRUCTION

13.01 Forms and Form Setting. On all new mainline pavement construction, slip form process will be required. If the Contractor wants to use standard forms rather than slip forms because the area is small, they must submit a written request to the Director of Public Works for an exception. If the request is granted, the contractor will be required to meet certain requirements as listed herein. Outside forms shall be metal, of depth equal to the design thickness of the pavement at its edge, and straight and free from warp. When integral curb is required, the additional height represented by the curb may be obtained by bolting extra forms upon the top of the main form. Wood forms or flexible or curbed metal forms of proper radii shall be used for curves having radii of less than 100 feet. The forms shall be neatly, tightly, and securely pinned and staked to the line and grade furnished by the Engineer. They shall not at any time show a variation of more than 1/8 inch in a ten (10) foot length from the true plane of top of forms. Shimming with loose earth, pebbles, etc. will not be permitted.

Forms shall be cleaned and oiled before concrete is placed against them. When pavement is being laid contiguous to previously finished concrete pavement of the same finish grade elevation or contiguous to previously finished independent curb and gutter, such finished pavement or curb and gutter may be made to serve as side forms and as a guide for striking, tamping, and finishing equipment.

13.02 Air Entraining. When using specifications for State of Nebraska 47-B concrete, the total air content shall be 6% plus or minus 1-1/2% by volume of the wet concrete as determined by AASHTO Standard Method T-121 or ASTM Method C-231 and up to 9% for sand and gravel mix.

13.03 Consistency. The quantity of water shall be determined by the Engineer in accordance with these specifications under section entitled Cement - 47-B (Modified) and ABX (Modified) Concrete and not varied without the Engineer's consent. The Contractor shall furnish and use with the mixer an approved adjustable water measuring device which will prevent excess water flowing into the mixer so the consistency may be under positive control and all batches may be of the same consistency.

In general, the minimum amount of water shall be used which will produce the required workability. The mortar shall cling to the coarse aggregate and shall show no free water when removed from the mixer. The upper surface of the set concrete shall show a cement film upon the surface and shall be free from all laitance. In no case shall an amount of water be used sufficient to cause the collection of a surplus on the surface or to cause segregation during the transportation to place of deposit. The concrete must be of workable consistency when placed.

13.04 Mixing. The mixing shall be done in a batch-mixer of approved type which will insure the uniform distribution of the material throughout the mass so the mixture is uniform in color and smooth in appearance. No mixer which has a capacity of less than one-sack batch shall be used on any work. The concrete shall be mixed in quantities required for immediate use. Concrete which has developed initial set or is not in place within thirty (30) minutes after the water has been added shall not be used. Retempering concrete by adding water or by other means will not be permitted.

The concrete shall be mixed for a period of at least one (1) minute after all the ingredients are assembled in the drum with the drum revolving at a rate for which the mixer was designed but, in no case, shall it be less than twelve (12) nor more than twenty (20) resolutions per minute. The mixer shall be equipped with an attachment for satisfactorily locking the discharging device to prevent the emptying before the minimum time required. The entire contents of the drum shall be discharged before any materials for the succeeding batch are placed therein.

No concrete shall be mixed while the air temperature is at or below 40 degrees Fahrenheit, except when specifically permitted by the Engineer. In such case, all water used for mixing concrete shall be heated to a temperature of at least 70 degrees but not over 150 degrees Fahrenheit. When artificial heat is applied and the air temperature is above 32 degrees Fahrenheit, the mixed concrete shall not be less than 70 degrees Fahrenheit at the time of the placing in the forms, and no concrete shall be placed in the forms when the air temperature is below 32 degrees Fahrenheit. In no case shall material containing frost or lumps of hardened material be used. When ready-mixed concrete is to be produced, the Contractor shall notify the Engineer in writing at least fourteen (14) days in advance of mixing operations as to location, type of plant and equipment which they propose to use in proportioning, mixing, and hauling concrete.

The Contractor shall furnish at least eight (8) standard 50 pound weights for calibrating and testing scales used in weighing aggregates and cement.

Ready-mixed concrete shall be mixed and delivered to the site of work by means of one of the following combinations of operations:

1. Mixed completely at a central mixing plant and the mixed concrete transported to the point of delivery in a truck agitator or in a truck mixer operating at agitator speed or in approved non-agitating equipment (known as central-mixed concrete).
2. Mixed partially at a central mixing plant and mixing completed in a truck mixer (known as transit-mixed concrete).
3. Aggregates and cement proportioned in a central plant and mixed completely in a truck mixer (known as transit-mixed concrete).

All mixers and agitators shall be operated within the limits of the manufacturer's rated capacity. They shall be operated at the speed of rotation for which the equipment was designed. Attached to each truck mixer and truck agitator shall be a metal plate on which is stated the manufacturer's capacities in terms of volume of mixed concrete and the manufacturer's stated speed of rotation for both mixing and agitation.

The truck mixer or agitator shall consist of a closed water-tight revolving drum suitably mounted and fitted with adequate revolving blades. Truck mixers shall be capable of combining aggregates, cement, and water into a thoroughly mixed and uniform mass of concrete and of discharging the concrete without segregation. Truck agitators shall be capable of transporting and discharging concrete without segregation.

For revolving drum type mixers the mixing speed shall not be less than seven (7) revolutions per minute of the drum nor greater than that which will produce a peripheral velocity of more than 225 feet per minute. For revolving blade type mixers, the mixer speed shall not be less than six (6) nor more than sixteen (16) revolutions per minute of the mixing blades. Agitation speed shall not be less than two (2) nor more than six (6) revolutions per minute of the drum or mixing blades.

Concrete transported without agitation shall not be used if the period elapsed between the time the concrete is discharged from the mixer and the time it is placed is greater than thirty (30) minutes. Concrete transported with agitation shall not be used when the cement has been in contact with the aggregate more than 1-1/2 hours before it is placed.

13.05 Placing and Finishing. The concrete shall be deposited on the prepared subgrade or on the granular foundation course so there shall be no separation of the mortar and the aggregate, and then shall be spread to the required depth and for the entire width of the pavement by approved methods, struck off, and finished. The subgrade templet shall be drawn over the subgrade or foundation course ahead of the point where concrete is being placed and shall be kept in position while the concrete is being placed. The concrete shall be deposited on the subgrade or granular foundation course between the forms in position and in such quantity as to make a uniform layer of about one (1) inch greater than the required thickness. During the operation of striking off the concrete, a uniform ridge of concrete at least three (3) inches in depth shall be maintained ahead of the vibratory strike-off screed for its entire length. After being deposited, it shall be consolidated along the forms and along all joints. At the end of the day or in case of unavoidable interruption of more than thirty (30) minutes, a transverse construction joint shall be placed at the point of stopping work, provided the section on which the work has been suspended shall not be less than ten (10) feet in length. The working edge of the screed shall be shaped to the required cross section of the pavement. After the concrete has been properly consolidated and struck off, the entire surface shall be floated longitudinally, from bridges, with a float at least twelve (12) feet long and twelve (12) inches wide. If made of wood, this float shall be two (2) inches thick. If made of metal, it shall have a weight approximately equal to a similar float made of two (2) inch plank and shall be lined on its bottom face with wood, having rounded edges. The float shall be operated by two men, one at each end, each man standing on a bridge spanning the pavement. The longitudinal and transverse motion shall be passed slowly from one side of the pavement to the other a sufficient number of times, at least twice, until the float on its last passage shall show contact with the concrete throughout its entire length. The bottom surface of the float shall remain flat on the surface of the concrete during the entire operation of longitudinal floating. The next section to be floated shall overlap the one previously floated by half the length of the float.

After the concrete has been floated longitudinally, the surface shall be floated transversely using a float of 1"x12" material three (3) to four (4) feet in length and fitted with a handle of sufficient length to permit the float to reach just beyond the center line. Any high or low areas exposed as a result of this floating shall be corrected prior to belt finishing.

After the concrete has been floated transversely and the water sheen has disappeared from the surface of the pavement, the final finish shall be given with a canvas or rubber belt, burlap drag or brooming, or any combination of the above as directed by the Engineer.

If belting is selected, it shall be accomplished with a belt of two to four ply having a width of not less than six (6) inches and a length at least two (2) feet greater than the width of the pavement. The belt shall be operated with a combined crosswise and longitudinal motion, care being taken not to work the crown out of the pavement or to permit the edges of the belt to dip into the surface of the concrete.

If a broom finish is selected, it shall be accomplished by drawing a broom across the surface from the center line toward each side with the broom held perpendicular to the surface with only one stroke of the broom on each portion of the surface. (If the pavement is being constructed lane-at-a-time, the broom shall be drawn across the full width of each lane in one operation.) The broom shall be of the push broom type not less than 18" wide made from bass or bassine fiber not more than five (5) inches long and with a handle at least one (1) foot longer than the width of pavement being broomed in one operation. The brooming operations shall be executed so the corrugation will be uniform in appearance and not more than 1/16 inch in depth.

If a burlap drag finish is selected, it shall be accomplished by drawing a wet burlap, carpet, or canvas drag over the surface in a longitudinal direction. The drag shall be at least two (2) feet longer than the width of the slab being placed and shall be wide enough so about three (3) feet will be in contact with the pavement while it is in use. If burlap is used, the drag shall consist of not less than two (2) layers. Drags shall be rinsed or washed as often as necessary to remove hardened particles which would mar the uniform surface that would be obtained with a clean drag.

13.06 Surface Test. Before final finishing and previous to initial set, the surface of the pavement shall be tested under the supervision of the Engineer. All irregularities or undulations not within the tolerance of the following test shall be corrected with fresh concrete and the affected surface brought within the requirement of the test and refinished if necessary. The test shall be made with a transverse testing templet and straightedge at least ten (10) feet long. The templet shall be accurately shaped in conformity with the typical cross section and shall be subject to the approval of the Engineer. The templet shall be used to test the shape of the surface transversely, the straightedge for longitudinal trueness. The straightedge shall be placed parallel to the center line so as to bridge any depressions and touch any high spots. Ordinates exceeding one fourth inch measured from the face of the templet or straightedge when in position at any point shall be eliminated by means of a long-handled wood float.

As soon as the pavement has set sufficiently to permit walking on it and not later than 10:00 a.m. of the day following the placing of the concrete, it shall be thoroughly checked by the inspector with a straightedge. All variations in excess of one fourth inch measured from the surface of the straightedge when it is placed parallel to the center line shall be plainly marked. The Contractor shall at once eliminate such variations by the use of approved grinding tools or carborundum brick and water. The work of grinding or rubbing shall not be performed in such manner or carried to such extremes that the bond of the concrete shall be broken. The use of brush hammer or similar device to remove irregularities after the concrete has taken its final set will not be permitted. All templets, straightedges, and other testing devices shall be furnished by the Contractor.

13.07 Headers. Concrete headers extending to full depth and width of the pavement shall be constructed at locations shown on the plans. They shall be constructed to the dimensions and design called for in the plans.

13.08 Transverse Construction Joints. Whenever concreting is stopped for a period of over thirty (30) minutes, a transverse construction joint shall be formed by finishing the concrete to a bulkhead made of two (2) inch material cut to the exact cross section of the pavement slab, as shown in the plans. When the concreting is resumed, the bulkhead shall be moved taking care not to disturb any concrete placed. The joints shall be constructed perpendicular to both the center line and the surface of the pavement. In no case shall an emergency construction joint be allowed within ten (10) feet after placing a regular expansion or construction joint. If the joint falls within this limit, the concrete shall be removed back to the previously installed joint.

When a construction joint is placed at a location where integral curb is being constructed, a piece of pre-formed joint material one half inch in thickness and conforming to the cross section of the curb shall be placed through the curb at the construction joint. The edges of the concrete shall be rounded to a radius of not more than one fourth inch.

13.9 Transverse Expansion Joints. Expansion joints shall be of a premoulded bituminous fiber type conforming to these specifications under the section entitled Joint Filler.

The joint shall extend entirely through the pavement and the joint filler shall be placed so the top edge will be one half inch below the surface of the finished pavement. No section of the joint material shall be shorter than the width of pavement strip between longitudinal joints. Before the pavement is opened to traffic, this space shall be swept, cleaned, and filled with approved joint sealing material.

The pre-formed expansion joint material shall be held securely by means of a special metal joint holder and removable cap, perpendicular to both the center line and the surface of the pavement. The metal joint holder and cap shall remain in place until after the passage of the concrete spreader. After the concrete has been finished, the metal joint holder and cap shall be removed and the edge of the concrete rounded to a radius of not more than one fourth inch. When integral curb is being constructed, an additional piece of pre-formed material of the same cross section as the curb shall be extended through the curb and to the top surface of the pavement. The joints shall be so installed and finished to insure complete separation of the slabs.

13.10 Transverse Contraction Joints. Transverse contraction joints shall be constructed at intervals of not less than ten (10) feet or more than sixteen (16) feet. The joints shall be true and straight to the center line and surface of the pavement. Variation of more than one half inch in ten (10) feet from a straight line will not be permitted. The joint shall be placed so its junction with the longitudinal joint will be a neat fitting connection. All transverse contraction joints shall be done by the saw cut method. To prevent the development of random cracks, joints at approximately eighty (80) feet intervals shall be sawed the same day as the pour is made. All other transverse contraction joints shall be sawed the following afternoon.

13.11 Longitudinal Joints. Longitudinal contraction joints, when required, shall be in accordance with the requirements for transverse contraction joints.

All sawed longitudinal joints shall be sawed before the concrete has attained an age of seven (7) days and before the pavement is opened to any vehicular traffic.

13.12 Curing. As soon as the concrete has hardened sufficiently to prevent excessive marring of the surface or adherence thereto, the concrete shall be protected with a single covering of burlap, placed and kept saturated for at least twelve (12) hours. As soon as the burlap is removed, the top surface and the edges of the pavement shall be covered with a continuous uniform nonbituminous impervious coating. The curing compound may be applied in either one or two applications in accordance with the directions of the manufacturer. However, if applied in two coatings, the second shall be applied not later than thirty (30) minutes after the first. In no case shall the rate of application be less than one (1) gallon per fifteen (15) square yards of surface area.

The sides of the pavement slab or back side of integral curb shall be covered with the curing compound within thirty (30) minutes after removal of the form.

When wet cotton mats, wet jute felt mats, paper, or any other method than curing compound is to be used for curing, the Contractor shall notify the Engineer in writing at least fourteen (14) days in advance giving the type and specifications of material and method to be used.

When it is expected that during the progress of the work the temperature may fall below 40 degrees Fahrenheit, a sufficient supply of straw, hay, grass, or other material suitable, in the judgment of the Engineer, must be maintained on hand to cover the concrete and to sufficiently protect the surface and edges against freezing until it is at least ten (10) days old. In such case, at the discretion of the Engineer, wetting and spraying may be omitted. Manure shall not be used as a protection for green concrete. Whenever the temperature falls below 40 degrees Fahrenheit, freshly finished concrete shall be protected by frames enclosed by canvas or other type of housing and the temperature of the air surrounding the concrete shall be maintained at not less than 45 degrees Fahrenheit. Sufficient heating apparatus, such as lanterns, suitable stoves, or steam equipment, shall be furnished and maintained by the Contractor. Any concrete showing injury by freezing on uncovering shall be removed and replaced at the expense of the Contractor.

13.13 Sealing of Joints. Joint sealing operations shall not be started until after final curing is completed. All joints which require sealing shall be thoroughly cleaned by a jet of compressed air. Any excess mortar or concrete shall be cut out with chisels. Joints shall be filled only when completely dry. The filler used shall be material as specified in these specifications under the section entitled Joint Sealing Material. The cleaning and filling shall be carefully done with proper equipment and a neat workmanlike joint obtained, free from excess and unsightly filler.

The joint sealing material shall be melted uniformly and with constant stirring in an asphalt kettle of such design that direct flames are not applied to the immediate surfaces of the kettle which are in contact with the joint sealing material. The material shall be furnished or prepared in pieces of such size and shape that the material can be melted readily to the proper pouring consistency. The heating of the material shall be arranged to minimize the length of time during which the temperature of the material exceeds 350 degrees Fahrenheit. In no case shall the temperature exceed the maximum recommended by the manufacturer. The joints shall be filled with the use of a pouring device which is satisfactory to the Engineer. Precautions shall be taken to prevent spilling material on surfaces of the pavement adjacent to the joint.

13.14 Protection. The Contractor shall provide and maintain substantial barricades, warning signs, and flares to provide the public and the construction work adequate protection and keep all traffic off the pavement.

13.15 Opening to Traffic. Before any traffic is permitted on the concrete, all curing and protecting materials other than membrane shall be carefully removed from the finished work and the concrete shall be swept clean. No section of pavement shall be opened to traffic until the concrete has reached a minimum age of fourteen (14) days or compression strength of 3000 psi.

The Contractor's forces may be allowed on the pavement for the purpose of clean up work any time after the concrete has reached a minimum age of seven (7) days.

13.16 Acceptance. The Contractor shall furnish a minimum of two (2) cores at locations designated by the Engineer for each 1000 square yards of pavement placed, and the acceptance of the pavement may be governed by the quality and thickness as shown by the cores. Slabs of pavement which are found to be more than one half inch short of the specified thickness shall be removed and replaced at the Contractor's expense with concrete of specified quality and thickness. If, however, in the opinion of the Engineer, there is no probability of immediate failure of such deficient slabs, they may allow the Contractor the choice of leaving the defective slabs in place and receiving no compensation or payment for the same or of replacing the pavement slab as provided above.

If the average strength of test cores or test cylinders, cured at a temperature within the range of 60 to 80 degrees Fahrenheit, is more than ten percent (10%) below the required strength, the Engineer may elect either to permit such pavement to remain in place and limit the payment for such defective work to a maximum of 90% of the contract unit price or require the Contractor, at Contractor's expense, to remove the pavement area deficient in the specified strength and replace it with pavement of satisfactory quality.

SECTION 14 - METHOD OF MEASUREMENT AND BASIS OF PAYMENT

14.01 Clearing and Grubbing. Clearing and grubbing of trees larger than six (6) inches in diameter will be measured for payment by counting the actual number of trees removed. The diameters of trees will be computed by measuring the circumference and dividing by 3.14. Payment shall be made at the contract unit price per each tree at the diameter or group of diameters shown in the bid.

Stumps will be measured for payment by taking the average diameter at cutoff. Payment shall be made at the contract unit price per each stump at the diameter or group of diameters shown in the bid.

Hedge removal will be measured for payment in lineal feet of a row of hedges.

Weeds, rubbish, and other herbaceous vegetation will not be measured for payment but will be considered as subsidiary to the contract work.

14.02 Site Preparation. Crosswalks and private walks to be removed within the area between construction lines will be measured for payment in square feet in their original position. Driveway approaches will be measured for payment in square yards in their original position.

Existing straight curb and curb and gutter to be removed will be measured for payment by length in lineal feet. Measurements for the straight curb will be made along the front face of the curb. Measurements for curb and gutter will be made along the flow line of the gutter.

Removal of existing pavement headers will be measured for payment by length in lineal feet.

Compaction over all existing utility lines will be measured for payment as a single unit except when in clay soil. In clay soil, excavation, additional materials, and recompaction over utility lines will be paid for as additional excavation.

14.03 Grading, Surplus Earth, Embankment. All grading, removal of surplus earth, and embankment will not be measured for payment but shall be subsidiary to the paving.

14.04 Granular Foundation Course. Granular foundation course will be measured for payment by area in square yards or cubic yards.

14.05 Manholes. Adjusting manholes to grade will be measured for payment as a single unit for each manhole that is adjusted to grade as shown in the plans or as directed by the Engineer.

14.06 Storm Sewer Inlets. Adjusting storm sewer inlets to line and grade will be measured for payment as a single unit.

14.07 Integral Curb. Integral curb will be measured for payment by length in lineal feet. Measurement will be made along the back side of the curb.

14.08 Concrete Pavement. Concrete pavement will be measured for payment by area in square yards. Concrete pavement shall include all joints, curing, sealing, etc. not specifically designated as separate items.

14.09 Beams. Concrete pavement beams will be measured for payment by length in lineal feet.

14.10 Headers. Concrete headers constructed as part of the project will be measured for payment by length in lineal feet.

14.11 Transverse Expansion and Miscellaneous Joints. Transverse expansion joints and all miscellaneous joints using premoulded bituminous fiber will be considered incidental to the paving construction and not as a separate pay item.

14.12 Concrete Test Cylinders. Three (3) concrete test cylinders shall be required for each block of concrete pavement placed or as directed by the Engineer.

14.13 Testing. The Engineer may require testing of coarse and fine aggregates and cement before they are used in the work. If so ordered, the Contractor shall pay the cost thereof.

The testing of cylinders shall be paid for by the Contractor.

14.14 Miscellaneous. Any item listed in the Engineer's Estimate and not covered in the specifications will be measured in the most workmanlike manner for payment according to the designation listed such as cubic yards, square feet, square yards, lineal feet, gallons, each, etc.

DIVISION III

CURB AND GUTTER SIDEWALKS, AND DRIVEWAYS

DIVISION III
CURB AND GUTTER,
SIDEWALKS AND DRIVEWAYS

C O N T E N T S

Section	Description
15	**SCOPE OF WORK**
16	**MATERIALS**
16.01	Cement
16.02	Sand-Gravel
16.03	Fine Sand and Coarse Aggregate
16.04	Water
16.05	Joint Filter
16.06	Joint Sealing Material
17	**CONSTRUCTION METHODS**
17.01	Subgrade Preparation
17.02	Forms and Form Setting
17.03	Concrete
17.04	Expansion Joints
17.05	Clean Up
18	**CURB AND GUTTER**
19	**SIDEWALKS**
20	**DRIVEWAYS**
21	**METHOD OF MEASUREMENT AND BASIS OF PAYMENT**
21.01	Curb and Gutter
21.02	Sidewalks
21.03	Driveways
21.04	Expansion and Miscellaneous Joints
21.05	Acceptance

DIVISION III
CURB AND GUTTER,
SIDEWALKS AND DRIVEWAYS

This division is written so that ordinarily the type of construction described is complete, but, where applicable, other divisions are considered a part of these specifications.

SECTION 15 - SCOPE OF WORK

This work shall consist of constructing curb and gutter, sidewalks, and driveways of Portland cement concrete on an approved, prepared subgrade in strict accordance with these specifications and in conformity with the lines, grades, and applicable drawings. All curb and gutter districts constructed shall conform to Division II, Portland Cement Concrete, as well as these specifications.

SECTION 16 - MATERIALS

16.01 Cement - Portland cement shall conform to all requirements of ASTM C-150, Type I, "Specifications for Portland Cement", with subsequent additions and amendments thereto, and also the following general requirements.

Cement shall be stored to provide adequate protection against dampness, and no cement shall be used that has become caked or lumpy. No reclaimed cement shall be used. No cement which has been left in storage more than ninety (90) days after shipment from the mill shall be used unless retested and, if failing to meet the requirements specified, shall be rejected. Normally, cement purchased from local dealers shall be considered satisfactory.

16.02 Sand-Gravel - Sand-gravel for concrete shall be a mixture of sand and gravel composed of clean, hard, durable, uncoated pebbles free from injurious amounts of soft or flaky particles, shale, alkali, organic matter, or other deleterious materials. The following materials shall be considered objectionable and percentage by weight shall not be greater than:

Clay lumps	0.5
Coal and carbonaceous shale	0.5
Unsound chert particles retained on 3/8" sieve	3.0

Gradation requirements for sand-gravel aggregates for concrete are as follows:

	Minimum	Maximum
Total % retained on 1" sieve	--	0
Total % retained on #4 sieve	10	35
Total % retained on #10 sieve	45	65
Total % retained on #20 sieve	65	85
Total % retained on #30 sieve	75	85
Total % retained on #100 sieve	95	100
Total % retained on #200 sieve	97	100

Platte River sand-gravel meeting the above gradation is considered satisfactory.

16.03 Fine Sand and Coarse Aggregate. When 47-B concrete is required, see Division II, Portland Cement Concrete Pavement, for specifications.

16.04 Water. Water used for mixing concrete shall be free from oil, acid, alkali, organic matter, or other deleterious materials. Water from wells or City mains shall be considered satisfactory.

16.05 Joint Filter. Joint filter shall consist of premolded bituminous fiber uniformly impregnated with between 35% and 50% durable asphalt by weight and being furnished in strips of the dimensions specified in the plans. A one (1) inch thick sample when compressed to 50% of original thickness at a rate of 1/10 inch per minute and released shall show at least 70T recovery within one hour after compression and shall not have required more than 500 pounds per square inch compression load and extrusion of not more than 1/8 inch.

Expansion joint material shall be 3/4 inch or more in thickness and shall conform to AASHTO M33-48 (Pre-formed Expansion Joint Filler for Concrete).

16.06 Joint Sealing Material. The hot pour paving joint materials shall be of the rubber-asphalt type and shall be melted in a double jacket kettle equipped with an agitator for stirring the material during melting and pouring. The rubber-asphalt shall meet Federal Specifications SS-S-164 or subsequent revisions.

SECTION 17 - CONSTRUCTION METHODS

17.01 Subgrade Preparation. The subgrade shall be prepared by excavating or filling to the required elevation for bottom of concrete. The subgrade shall be thoroughly tamped or otherwise compacted to insure stability. In fills, the subgrade shall be made at least one foot wider on each side than required by the curb and gutter, sidewalk, or driveway.

Stakes will be set by the City Engineering Division of the Public Works Department for line and grade after a sidewalk permit has been issued by the Public Works Department. The subgrade shall slope toward the street curb on a grade of not less than one-fourth inch per foot.

Where fill is required, it will be laid in six (6) inch layers and thoroughly tamped to the satisfaction of the Engineer. Mushy or spongy material will not be used for fill material. Soft and spongy material will be removed and replaced with suitable backfill material.

Trees that are in the way of the sidewalk will be removed including the stump. Roots of trees that are located outside the sidewalk but extend under the sidewalk shall be cut off at least six (6) inches below the sidewalk.

17.02 Forms and Form Setting. The forms shall be of wood or metal, straight and free from warp, and of sufficient strength to resist springing during the process of depositing concrete against them. All forms shall be securely staked, braced, and held firmly to the required line and grade. All forms shall be thoroughly cleaned and oiled before concrete is placed against them.

Wood forms shall be not less than 1-5/8 inches in thickness except for curvilinear sections where properly braced forms of lesser thickness may be used.

Tolerances of 1/8 to 1/4 inch shall be maintained for form alignment and vertical elevation.

17.03 Concrete. Concrete shall conform to Division II, Portland Cement Concrete Pavement.

Concrete shall be mixed in an approved mixer with sufficient water added to produce a workable mix. In no case shall so much water be used as to cause the collection of a surplus on the surface or to cause segregation during transportation to place of deposit. All materials shall be accurately weighed or measured, and mixing shall continue for a full minute after all materials are in the drum of the mixer. Any concrete which is not in place within thirty (30) minutes after the water has been added shall not be used.

The operation of depositing and compacting concrete shall be conducted so as to form a compact, dense, artificial stone of uniform texture which shall show smooth faces on all exposed surfaces.

Transit-mixed or ready-mixed concrete may be used provided the concrete is placed in the forms before it has developed initial set and shall comply with ASTM C95-58 and the requirements of these specifications. Such concrete must be transported in such a way as to prevent segregation between the aggregates and the cement. Concrete shall develop an ultimate compressive strength of not less than figures shown in Section 11.01 when tested in standard 6" x 12" cylinders at an age of twenty-eight (28) days in accordance with ASTM C39-56T.

Hand mixing of concrete will not be permitted except with specific permission of the City Engineer on very small jobs or in case of emergency.

The concrete surface shall be treated with a liquid treatment for curing such as Tri-Kote or approved equal or burlap cure or plastic covering may be used in the concrete cure. The plastic film used for curing concrete or subgrade insulating material shall be tough, pliable, moisture-proof, and sufficiently durable to retain its moisture-proof properties. The plastic film can be a polyethylene film not less than 0.001 inch thick. Reinforcement materials where required or as shown on the plans and wire mesh shall comply with ASTM A-185 and reinforcing bars where required shall conform to ASTM A-15 or A305.

Air entrained concrete shall be obtained by using air-entrained Portland cement or air-entraining admixtures. Air content of fresh concrete shall measure six (6) to nine (9) percent. Air entrained concrete shall be used for all sidewalks, driveways, and curb and gutter.

The use of high-early strength Portland cement concrete will not be required unless stipulated in the plans and in the Special Provisions on certain contracts.

Concrete shall not be placed when inclement weather prevents good workmanship. Concrete shall not be placed when temperature is below 40 degrees F without specific permission of the Engineer.

The surface shall be wood floated to give a proper roughness to prevent foot slippage for normal foot traffic.

The cross slope shall be 1/4 inch per foot of width of sidewalk.

The sidewalk after pouring shall be protected from foot traffic for twenty-four (24) hours and vehicle traffic for seven (7) days.

17.04 Expansion Joints. Expansion joints shall be placed as indicated on the drawings or at each location where new construction connects with existing construction. Specifically, joints shall be placed where new curb and gutter joins existing curb and gutter, where sidewalks connect to curb and gutter, and at such other locations as the Engineer may direct. On long runs of new construction, joints shall be placed as directed. In no case shall the spacing between expansion joints exceed one hundred (100) feet.

SECTION 18 - CURB AND GUTTER

Concrete curb and gutter shall be constructed to the lines, grades, dimensions and design as called for in the drawings.

There shall be installed every six (6) feet a separator true to the dimensions and cross-section of the combined curb and gutter. This separator shall be removed after the concrete has taken its initial set and the joint properly edged to provide a neat joint. In finishing joints prior to and after removal of separators, extreme care shall be exercised to avoid raising the edge of the joint causing water pockets in the gutter flow line. Separators shall not exceed 1/8 inch in thickness. Immediately following finished operations and before the concrete has taken its final set, the gutter flow line shall be checked with a straightedge not less than ten (10) feet in length and approved by the Engineer.

The maximum deviation from true grade shall not exceed 1/4 inch and any irregularities shall be corrected immediately.

SECTION 19 - SIDEWALKS

Concrete sidewalks shall be constructed to the lines and grades determined by the Engineer. Sidewalks shall have a minimum width of four (4) feet and a depth of four (4) inches and shall be constructed with a side slope of 1/4 inch per foot unless otherwise approved by the Engineer or Engineer's representative. Surfaces shall be marked off in square blocks having an area of not less than sixteen (16) nor more than thirty-six (36) feet. On these lines, the concrete shall be cut through not less than 1/4 inch thickness with a pointed trowel or suitable spading tool and the concrete edged on both sides.

Sidewalks that are being constructed across driveway openings shall have a minimum depth of five (5) inches.

The surface shall be floated with a steel float just enough to produce a smooth surface, free from irregularities. All edges and joints shall be rounded to a radius of 1/4 inch with an approved finishing tool. The surface shall then be brushed with a fine bristle broom or wood float to slightly roughen the surface and remove the finishing tool marks.

SECTION 20 - DRIVEWAYS

Driveway approaches connecting private driveways to City streets shall be constructed with Portland cement concrete except where the private driveway connects to a full depth asphalt street. Where the driveway connects to a full depth asphalt street, asphaltic concrete may be used in construction of the driveway approach.

Driveway approaches shall be constructed to the lines and grade set by the Engineer. The minimum depth of both Portland cement concrete and asphaltic concrete for driveway approaches shall be five (5) inches and, in the event heavy loads are anticipated, the depth shall be increased to handle the expected loads.

SECTION 21 - METHOD OF MEASUREMENT AND BASIS OF PAYMENT

21.01 Curb and Gutter. Combination curb and gutter will be measured for payment by length in linear feet. Measurements will be made along the flow line of the gutter.

21.02 Sidewalks. Sidewalks will be measured for payment by area in square feet.

21.03 Driveways. Driveways as referred to in this paragraph are that portion of existing driveway approaches having to be removed behind the construction lines of pavement due to the driveway approach lying partly within the area between construction lines. Driveways will be measured for payment in area in square yards.

21.04 Expansion and Miscellaneous Joints. Expansion joints and all miscellaneous joints using pre-molded bituminous fiber will be considered incidental to the construction and not as a separate pay item.

21.05 Acceptance. Upon completion of a job, the Engineer shall be notified, and they shall make an inspection of the work. The Contractor will be notified in writing as to the acceptability of the work.

DIVISION V

STORM AND SANITARY SEWER

DIVISION V
STORM AND SANITARY SEWERS

C O N T E N T S

SECTION	DESCRIPTION	
25	**SCOPE OF WORK**	
26	**MATERIALS**	
26.01	Reinforced Concrete Pipe	
26.02	Concrete Pipe Joints	
		Revised 1-18-2010
26.03	Vitrified Clay Pipe	
26.04	Vitrified Clay Pipe Factory-Fabricated Joints	
26.05	Cast Iron Pipe and Fittings	
26.06	Cast Iron Pipe Joints	
26.07	Portland Cement Concrete	
26.08	Reinforcement	
26.09	Structural Brick	
26.10	Storm Sewer Inlet Frames and Grates	
26.11	Manhole Rings and Cover	
		Revised 1-18-2010
26.12	Grout	
26.13	Manholes	
26.14	Core Drilling	
		Revised 1-18-2010
26.15	Sulfate Resistance Concrete Specifications	
27	**CONSTRUCTION METHODS**	
27.01	Excavation	
27.02	Protection of Existing Utilities	
27.03	Pipe Laying and Jointing	
27.04	Manholes	
		Revised 1-18-2010
27.05	Storm Sewer Inlets	
27.06	Pipe Bedding	
27.07	Trench Backfill	
27.08	Backfilling Under Pavement	
27.09	Nonshrinkable Backfill	
27.10	Stacks	
27.11	Separation from Water Mains	
27.12	Testing	
27.13	Exfiltration and Air Testing	
27.14	Television Inspection	
		Revised 1-18-2010
27.15	Exposure of Pipe or Manholes	
28	**DRAINAGE STRUCTURE CONSTRUCTION**	
28.01	Concrete Work	
28.02	Brick Work	
28.03	Precast Manhole Sections	
28.04	Acceptance	
		Revised 1-18-2010

29 **METHOD OF MEASUREMENT AND BASIS OF PAYMENT**
29.01 Sewer Pipe in Place
29.02 Wyes
29.03 Manholes
29.04 Storm Sewer Inlets

DIVISION V
STORM AND SANITARY SEWERS

This division is written so that ordinarily the type of construction described is complete but, where applicable, other divisions are considered a part of this specification.

SECTION 25 - SCOPE OF WORK

The work covered by this division of the specifications consists of furnishing all labor, plant, equipment, appliances, and materials and performing all operations necessary to construct and complete storm and sanitary sewers and appurtenances in strict accordance with these specifications, the applicable drawings, and subject to the terms and conditions of the contract.

SECTION 26 - MATERIALS

26.01 Reinforced Concrete Pipe. All reinforced concrete pipe shall meet the requirements and specifications of Reinforced Concrete Culvert, Storm Drain and Sewer Pipe, ASTM C76, Class III, and subsequent revisions, or as otherwise shown in the plans.

26.02 Concrete Pipe Joints.

1. Rubber Joint Filler. Rubber based joint filler shall be used on all concrete pipe joints unless otherwise specified.
2. Gasket Type Joints. When gasket type joints are required, they shall be as follows: Bell and Spigot Pipe Joints, ASTM C361, and subsequent revisions Tongue and Groove Pipe Joints, ASTM C443, and subsequent revisions.

All new storm sewer piping will be plastic or concrete where possible.

Revised 1-18-2010

26.03 Vitrified Clay Pipe. All vitrified clay pipe shall meet the requirements and specifications for Extra Strength Clay Sewer Pipe conforming to ASTM C700 or C425 compression joint and subsequent revisions or as otherwise shown on the plans.

26.04 Vitrified Clay Pipe Factory-Fabricated Joints. All vitrified clay pipe shall have O-ring gasket factory-fabricated joints that meet the requirements and specifications for Vitrified Clay Pipe Joints Using Materials Having Resilient Properties, ASTM C700 and subsequent revisions or as otherwise shown on the plans.

26.05 Cast Iron Pipe and Fittings. See Division VI, Water Mains.

26.06 Cast Iron Pipe Joints. See Division VI, Water Mains.

26.07 Portland Cement Concrete. The concrete shall be air-entrained as specified in Division III, Curb and Gutter, Sidewalks, and Driveways, in the section entitled Materials -- Sand-Gravel.

26.08 Reinforcement. The deformed bars that are used in reinforcing shall be Type B, Grade 2.

26.09 Structural Brick. Bricks shall be of the type that are satisfactory to the Engineer and shall be laid in 1:2 cement mortar.

26.10 Storm Sewer Inlet Frames and Grates. The frames and grates shall be of cast iron with tensile strength test not less than Class 25.

26.11 Manhole Rings and Covers. Unless shown otherwise on the plans, the rings and covers for manholes shall be 450 pound cast iron machined rings and covers with tensile strength test not less than Class 25.

All manholes will be inspected when any work is being done around the manhole ring and/or cover.

Revised 1-18-2010

26.12 Grout. Grout, where required, shall consist of equal parts of sand and cement with sufficient water to produce the proper consistency.

26.13 Manholes. All concrete used in the construction of manholes shall be in accordance with the following Sulfate Resistant Concrete Specifications, Section 26.15, dated March 20, 2002. This shall include all concrete used in the construction of pre-case manholes, manhole bases, and manhole inverts.

26.14 Core Drilling. If a sewer service is installed by core drilling into the public sanitary sewer main, the connection will be televised at the Contractor's expense prior to acceptance by the City.

Revised 1-18-2010

26.15 Sulfate Resistant Concrete Specifications

March 20, 2002
SUBMITTALS

A. Shop Drawings:

1. Curing compound data
2. Complete data on the concrete mix, including aggregate gradations and admixtures, in accordance with ASTM C94

B. Quality Control Submittals:

1. Manufacturer's application instructions for curing compound.
2. Ready-mix delivery tickets for each truck in accordance with ASTM C94.

QUALITY ASSURANCE

A. Concrete and Reinforcement: Unless otherwise specified. Meet the requirements of ACI 301 and 318/318R
B. Precast Reinforced Concrete: Unless otherwise specified. Meet the requirements of ASTM C478

C. Formwork: Unless otherwise specified, follow the recommendations of ACI 347.

D. Hot Weather Concreting: Conform to ACI 305R

E. Cold Weather Concreting: Conform to ACI 306R

ENVIRONMENTAL REQUIREMENTS

A. Do not place Concrete when the ambient temperature is below 40 degrees F or approaching 40 degrees F and air temperature less than 40 degrees F for the first 7 days, without special protection to keep Concrete above 40 degrees F.

B. Do not use curing compound where solvents in the curing compounds are prohibited by state or federal air quality laws. Use only water curing methods.

CONCRETE

A. Ready-mixed meeting ASTM C94, Option A.

B. Portland Cement: ASTM C595, Type IP containing less than 8 percent tricalcium aluminate.

C. Admixtures:

1. Air-Entraining; ASTM C260.
2. Water-Reducing; ASTM C494, Type A or D.
3. Superplasticizer: ASTM C494, Type for G.
4. Fly Ash: ASTM C618, Class C or F; not to exceed 25% total pozzolan by weight.

D. Mix Design:

1. Minimum Allowable 28 day Compressive Field Strength: 4,000 psi when cured and tested in accordance with ASTM C31 and C39.
2. Coarse Aggregate Size: 0.5-inch and smaller, 40% Limestone by volume minimum; State of Nebraska approved source.
3. Water/Cement Ratio: 0.38%.
4. Air Entrainment: Between 5.0 to 7.5%.
5. Water Reducers: Use in all concrete as per manufactures recommended guidelines.
6. Suerplasticizer: Use in all walls. Use in slabs at CONTRACTOR’s option.
7. Slump Range: 1 to 4 inches; before addition of Suerplasticizer.
8. Slump Range: 5 to 9 inches; after addition of Suerplasticizer.

E. Mixing: Minimum 70 and maximum 270 revolutions of mixing drum. Nonagitating equipment is not allowed.

REINFORCING STEEL

A. Deformed Bars: ASTM A615, Grade 60.

ANCILLARY MATERIALS

A. Nonshrink Grout:

    1. Color: To match concrete.
    2. Manufacturers and Products
        a. Master Builders Co., Cleveland, OH; Master Flow 928.
        b. Euclid Chemical Co., Cleveland, OH; Hi-flow Grout
        c. Or equal

B. Grout for Slipliner Invert Rehabilitation:

    1. Description: Rapid strength repair mortar.

    2. Final Set Time: 20 to 36 minutes.
    3. Manufacturers and Products:
        a. Master Builders Co., Cleveland, OH; EMACO T415
        b. Or equal

C. Protective Epoxy Coating for Exposed Grout at Slipliner Invert Rehabilitation:

    1. Strong Seal System by Johnson Service Co.; Kearney, NE 68848

D. Curing Compound: Required for Cast In Place Concrete

    1. Material: Solvent based containing chlorinated rubber solids in accordance with ASTM C309, with additional requirements that the moisture loss not exceed 0.030 grams per centimeter squared per 72 hours.
    2. Manufacturers and Products:

        a. Master Builders Co., Masterkure N Seal HS.
        b. Euclid Chemical Co.; Euco Super Floor Coat.
        c. Or Equal

FORMWORK

A. Form Material
    1. Use hard plastic finished plywood for exposed areas, and new shiplap or plywood for unexposed areas.
    2. Earth cuts may be used for forming footings.

B. Form Ties:
    1. Fixed conical or spherical type inserts that remain in contact with forming material and allow for dry packing of form ties holes.
    2. Ties shall withstand pressures and limit deflection of forms to acceptable limits.
    3. Wire ties are not acceptable.

C. Construction:
    1. In accordance with ACI 347.
    2. Make joints tight to prevent escape of mortar and to avoid formation of fins.
    3. Brace as required to prevent distortion during concrete placement.
    4. Brace as required to prevent distortion during concrete placement.
       On exposed surfaces locate form ties in uniform pattern or as shown. Construct so ties remain embedded in the wall with no metal within 1 inches of concrete surface when forms, inserts, and tie ends are removed.

D. Form Removal:
    1. Remove forms with care to prevent scarring and damaging the surface.

PLACING REINFORCING STEEL

A. Unless otherwise specified, place reinforcing steel in accordance with CRSI Recommended practice for placing Reinforcing Bars.

B. Splices and Laps:

    1. Top Bars: Horizontal bars placed such that 12 inches of fresh concrete is cast below in single placement.
    2. Horizontal wall bars are considered top bars.
    3. Laptop bars 42 diameters or minimum 24 inches.
    4. Lap all other bars 30 diameters or minimum 18 inches. Tie splices with 18-gauge annealed wire as specified in CRSI Standard.

PLACING CONCRETE

A. Place concrete in accordance with ACI 301.

B. Prior to placing concrete, remove water from excavation and debris and foreign material from forms. Check reinforcing steel for proper placement and correct discrepancies.

C. Before depositing new concrete on old concrete, clean surface using sandblast or bush hammer or other mechanical means to obtain a ¼-inch rough profile.

D. Place concrete as soon as possible after leaving mixer, without segregation or loss of ingredients, without splashing forms or steel above, and in layers not over 2 feet deep. Place within 1-1/2 hours after adding cement mix.

E. 8 feet maximum vertical drop to final placement, when not guided with chutes or other devices to prevent segregation due to impact with reinforcing.

COMPACTION

A. Vibrate concrete as follows:

    1. Apply approves vibrator at points spaced not farther apart than vibrator's effective radius.
    2. Apply close enough to forms to vibrate surface effectively but not damage form surfaces.
    3. Vibrate until concrete becomes uniformly plastic.
    4. Vibrator must penetrate fresh placed concrete and into previous layer of fresh concrete below.

CONSTRUCTION JOINTS

A. Locate as shown or as approved.

FINISHING

A. Floor Slabs and Tops of Walls

    1. Screed surface to true level planes.
    2. After initial water has been absorbed, float with wood float and trowel with steel trowel to smooth finish free from trowel marks.
    3. Do not absorb wet spots with neat cement.

B. Unexposed Slab Surfaces: Screed to true surface, bull float with wood float, and wood trowel to seal surface.

PROTECTION AND CURING

A. Protect fresh concrete from direct rays of sunlight, drying winds, and wash by rain.
B. Keep concrete slabs continuously wet for a 7-day period. Intermittent wetting is not acceptable or use curing compound only where approved by ENGINEER. Cure formed surfaces with curing compound applied in accordance with manufacturer's directions as soon as forms are removed and finishing is completed.
C. Remove and replace concrete damaged by freezing.

FIELD TESTS

A. Evaluation of Concrete Field Strength: In accordance with ACI 318/318R

SECTION 27 - CONSTRUCTION METHODS

27.01 Excavation. The ditch shall be excavated along the lines and to the depth as designated by the Engineer. The Contractor shall furnish, at Contractor's expense, all planks, stakes, spikes, grade boards, and twine that may be required. The Engineer shall have the right to limit the amount of trench that may be opened in advance of the line of work. Should the trench be excavated to a greater depth than that given by the Engineer, the Contractor shall refill to grade, at Contractor's expense, with good, well-tamped material. Trenches, where required, shall be properly sheeted and braced. The bottom of the trench under each pipe shall be shaped to receive the bottom quadrant of the pipe barrel. Bell holes shall be excavated so, after placement, only the barrel of the pipe receives bearing pressure from the trench bottom.

Whenever wet or unstable soil that is incapable of properly supporting the pipe, as determined by the Engineer, is encountered in the trench bottom, such soil shall be removed to the depth and length determined by the Engineer and the trench backfilled to grade with sand, gravel, or other suitable material.

All grading in the vicinity of trench excavation shall be controlled to prevent surface water from flowing into the trench. Any water accumulating in the trench shall be removed by pumping or other approved method. Material excavated from the trench shall be stacked in an orderly manner a sufficient distance back from the edge of the trench to avoid overloading and to prevent slides or cave-ins. Materials unsuitable for backfilling shall be wasted by the Contractor as directed by the Engineer.

A minimum of one foot of topsoil (unless otherwise noted on the plans) shall be removed in any and all areas covered by vegetation. This topsoil shall be stockpiled separately from the material removed from the remainder of the trench. After the pipe is installed and the trench backfilled to an elevation one foot (unless otherwise noted on the plans) below grade, the topsoil shall be replaced and compacted as previously described.

Excavation will not be classified. Whatever material is encountered shall be excavated to the proper grades and, if in any location such material is not sufficient to provide a uniform, even bed for the pipe, the trench shall be excavated at least three (3) inches deeper than the grade at the bottom of the pipe and the space thus excavated shall be refilled with earth or sand and thoroughly compacted.

Trench excavation shall not be paid for separately but shall be considered incidental to the sewer in place.

27.02 Protection of Existing Utilities. The accuracy of location of existing underground utilities as shown on the plans is not guaranteed. It shall be the duty of the Contractor to locate these utilities in advance of excavation and to protect them from damage after uncovering. No house service lines are shown on the plans. The Contractor shall contact the owners of the utilities for assistance in locating these service lines. Any expense incurred by reason of damaged or broken lines shall be the responsibility of the Contractor.

Pipe Laying and Jointing. Pipe shall be protected at all times against impact shocks and free fall. Laying of pipe in finished trenches shall be commenced at the lowest point with the spigot ends on bell-and-spigot pipe and tongue ends on tongue-and-groove pipe pointing in the direction of the flow. Pipe shall be set firmly to line and grade and, preparatory to making pipe joints, all surface of the pipe to be jointed shall be cleaned and dried. Joints shall be made tight to meet requirements of tests specified in the section of these specifications entitled Exfiltration, Infiltration, and Air Testing.

Sewer trenches shall be kept free from water by a method approved by the Engineer. The Contractor shall not pump sewage into a street or pump to a storm sewer unless authorized by the Engineer. Sanitary sewage must be returned to the sanitary sewer by means of pipe and hoses unless it is impossible to do so. In that instance, disposal must be approved by the Engineer.

27.04 Manholes. Manholes shall be constructed as indicated on the plans. Tops shall be fitted with cast iron rings and covers weighing approximately 450 pounds and satisfactory to the Engineer. Manholes over three (3) feet in depth shall be equipped with cast iron steps placed on approximately sixteen (16) inch centers. Drop inlet manholes shall be constructed where indicated on the plans.

Manholes of Precast sections conforming to ASTM C478 specifications may be used.

The three (3) types of manhole construction which have been approved are as follows:

- Type 1 – Standard Manhole
- Type 2 – Manhole with ConShield
- Type 3 – Manhole with ConShield and Epoxy Coating

Any substitutes must be approved by the Public Works Director.

Revised 1-18-2010

27.05 Storm Sewer Inlets. Storm sewer inlets shall be of the type as shown on the plans and constructed as per the detailed drawings.

27.06 Pipe Bedding. For Class “C” bedding, the space between the pipe and the side of the excavation up to one (1) foot above the top of the pipe shall be filled with sand or fine earth in layers of not more than six (6) inches thick and carefully tamped to form a solid bedding.

For Class “B” bedding, the trench shall be backfilled with a granular fill of crushed stone or pea gravel to an elevation which is half the diameter of the pipe, and the remaining distance from half the diameter of the pipe to one (1) foot above top of pipe shall be a tamped backfill as specified for Class “C” bedding. The granular fill shall have not less than 95% passing 1/2” and not less than 95% retained on a #4 sieve, shall be placed in not more than six (6) inch layers and compacted by slicing with a shovel.

27.07 Trench Backfill. The area more than one foot over the top of pipe shall be designated as trench backfill. Trenches shall not be backfilled until all required tests are performed and until the system installed conforms to the requirements of the plans and specifications. The trenches shall then be carefully backfilled up to one foot above the top of the pipe as specified in the section entitled Pipe Bedding. The balance of the excavated material shall be consolidated in the following manner. As backfilling proceeds, the entire mass shall be vibrated with a mechanical vibrator, provided, however, in all locations where plastic soils are encountered, the backfill material shall not be placed until the moisture content is low enough to obtain maximum density when tamped into place with mechanical tampers. Materials for tamped backfill and the method of placement and compaction thereof shall be specified for Class “C” pipe bedding. The completion of the trench backfill under pavement shall be done according to the section of these specifications entitled Backfilling Under Pavement.

Trench backfill and compaction testing shall adhere to the following requirements:

A. Public Right-of-Way: Backfill shall be compacted to at least 95% of the maximum dry density (obtained at optimum moisture content plus or minus 2% for silt or clay with no required moisture content for sand) as determined by AASHTO Method T99. The minimum frequency shall be one test for every 12" compacted lift for an area or length worked, but no more than 300' apart. A minimum of one test shall be taken for every 12" compacted lift for each street crossing regardless of the length.

B. Public Utility Easement: Backfill shall be compacted to at least 90% of the maximum dry density (obtained at optimum moisture content plus or minus 2% for silt or clay with no required moisture content for sand) as determined by AASHTO Method T99. The frequency shall be the same as that for public right-of-way. A minimum of one test shall be taken for every 12" lift for each easement crossing, regardless of the length.

The Engineer in charge shall be furnished a copy of the density testing results. Information on length or area worked, material identification and description, test thickness such as probe length or sample depth, location of sample, elevation of sample, etc. shall be recorded for each sample.

In unimproved areas such as easements and alleys, the trench or opening may be backfilled with sand which shall be flushed into place with water, provided the top twelve (12) inches of backfill shall be made of the excavated topsoil.

No separate or additional payment will be made for backfill compaction and density testing.

27.08 Backfilling Under Pavement. Nonshrinkable backfill will be required under all street sections, existing or proposed, unless the Director of Public Works approves the standard backfill methods. Standard backfill methods shall be as specified in the section of these specifications entitled Trench Backfill. When standard backfill methods are used, density tests will be required for each twelve (12) inch lift of compacted material placed and for each 300 lineal feet of trench regardless of the length Density test results shall be submitted to the Engineer before acceptance of the project by the City.

Trenches shall not be backfilled until all required tests are performed and the system conforms to the plans and specifications. The Contractor shall maintain the sewer trench backfill for one (1) year from the date of acceptance of the project by the City.

27.09 Nonshrinkable Backfill. All excavations where a sidewalk, curb, gutter, or paved street has been cut or where new paving (concrete or asphalt) will be placed shall be backfilled using nonshrinkable backfill. The backfill shall be filled to the subgrade of the undisturbed sidewalk, curb, gutter, paving, or earth surface.

The nonshrinkable backfill shall be a mixture of sand, gravel, Portland cement, and water which flows easily around the utility being covered and develops a 28 day compressive strength of from 30 to 200 psi. No nonshrinkable backfill mix designs shall be used without the approval of the Director of Public Works. Fly ash may be approved in the mix if test data are submitted to indicate the above characteristics are met.

27.10 Stacks. Where indicated on the plans or directed by the Engineer, six (6) inch stacks will be furnished and constructed complete with clay stoppers to within ten (10) feet of ground surface or above underground water surface. All stacks will be constructed in accordance with the standard plan entitled Stack Construction Details in Division VIII, Standard Plan Drawings.

A separate stack shall be constructed for each house connection and in no case shall two service connections be connected to the same stack.

27.11 Relation to Water Mains.

Horizontal and Vertical Separation. Sewers shall be laid at least 10 feet horizontally from any existing or proposed water main. The distance shall be measured edge to edge. In cases where it is not practical to maintain a 10 foot separation, the appropriate reviewing agency may allow deviation on a case-by-case basis, if supported by data from the design engineer. Such deviation may allow installation of the sewer closer to a water main, provided that the water main is in a separate trench or on an undisturbed earth shelf located on one side of the sewer and at an elevation so the bottom of the water main is at least 18 inches (460 mm) above the top of the sewer.

If it is impossible to obtain proper horizontal and vertical separation as described above, both the water main and sewer must be constructed of slip-on or mechanical joint pipe complying with public water supply design standards of the agency and be pressure tested to 150 psi (1034 kPa) to assure watertightness before backfilling.

Crossings. Sewers crossing water mains shall be laid to provide a minimum vertical distance of 18 inches (460 mm) between the outside of the water main and the outside of the sewer. This shall be the case where the water main is either above or below the sewer. The crossing shall be arranged so that the sewer joints will be equidistant and as far as possible from the water main joints. Where a water main crosses under a sewer, adequate structural support shall be provided for the sewer to maintain line and grade.

When it is impossible to obtain proper horizontal and vertical separation as stipulated above, one of the following methods must be specified:

a. The sewer shall be designed and constructed of PVC pipe and equal to water pipe, and shall be pressure tested at 150 psi (1034 kPa) to assure water tightness prior to backfilling.

b. Either the water main or the sewer line may be encased in a watertight carrier pipe which extends 10 feet (3 m) on both sides of the crossing, measured perpendicular to the water main. The carrier pipe shall be of materials approved by the regulatory agency for use in water main construction.

27.12 Testing. Upon completion of sewer, each pipe line and manhole will be tested as specified by the Engineer in charge. The Contractor shall furnish such tools, hose, and other equipment necessary for making such tests and shall be present during the inspection to note any deficiencies that may exist. Before final acceptance, all sewers shall be clean, shall comply with the specifications and all contract documents, and shall be acceptable to the Engineer and municipal authorities.

27.13 Exfiltration and Air Testing. Both the sewer pipe line and the manholes shall be tested. Manholes shall be exfiltration tested only. Sewer pipe lines shall be air tested only.

The first line between manholes shall be tested before backfilling and before any sewer pipe is installed in the remainder of the work. Thereafter, individual or multiple lines (optional to the Contractor with approval of the Engineer) shall be tested.

Exfiltration Test. This test shall be performed according to stated procedures and under the supervision of the Engineer. The test shall be conducted by blocking off all manhole openings, filling the manhole, and measuring the water level in the manhole for reference. The head above the pipe invert shall be about ten (10) feet. The head shall not exceed twenty-five (25) feet or be less than five (5) feet. The parameters for infiltration are similar. When the ground water level is above the pipe invert, the head shall be measured from ground water elevation. The total exfiltration shall not exceed 200 gallons per inch of diameter per mile of pipe per day. Manholes shall be considered as sections of 48 inch or 60 inch pipe. The exfiltration test shall be maintained for at least two (2) hours or as long as necessary to locate all leaks, as directed by the Engineer. If the leakage in any reach exceeds the allowable maximum, it shall be retested after the leaks are repaired.

Air Test. This test shall be performed according to stated procedures and under the supervision of the Engineer.

Equipment used shall meet the following minimum requirements: (a) Pneumatic plugs shall have a sealing length equal to or greater than the diameter of the pipe to be tested, (b) pneumatic plugs shall resist internal testing pressure without requiring external bracing or blocking, (c) all air used shall pass through a single control unit, and (d) individual hoses shall be used for the following connections: (1) from control unit to pneumatic plugs for inflation, (2) from control unit to sealed line for introducing the low pressure air, and (3) from sealed line to control unit for continually monitoring the air pressure inside the pipe being tested.

Procedures: All pneumatic lugs shall be seal tested before being used in the actual test installation. One length of pipe shall be laid on the ground and sealed at both ends with the pneumatic plugs to be checked. Air shall be pressurized to 25 psig. The sealed pipe shall be pressurized to 5 psig. The plugs shall hold against this pressure without movement of the plugs out of the pipe.

After a manhole to manhole reach of pipe has been backfilled and cleaned and the pneumatic plugs are checked by the above procedures, the plugs shall be placed in the line at each manhole and inflated to 25 psig. Low pressure air shall be introduced into this sealed line until the internal air pressure reaches 4 psig greater than the average back pressure of any ground water that may be over the pipe.

After a manhole to manhole reach of pipe has been backfilled and cleaned and the pneumatic plugs are checked by the above procedures, the plugs shall be placed in the line at each manhole and inflated to 25 psig. Low pressure air shall be introduced into this sealed line until the internal air pressure reaches 4 psig greater than the average back pressure of any ground water that may be over the pipe.

At least two (2) minutes shall be allowed for the air pressure to stabilize.

After the stabilization period (3.5 psig minimum pressure in the pipe), the air hose from the control unit to the air supply shall be disconnected. The portion of line being tested shall be termed “acceptable” if the time required in minutes for the pressure to decrease from 3.5 to 3.0 psig (greater than the average back pressure of any ground water that may be over the pipe) shall not be less than the time shown for the given diameters in the following table:

				SPECIFICATION TIME FOR LENGTH (L) SHOWN (MIN:SEC)							
1 Pipe Diameter (in.)	2 Minimum Time (Min: sec)	3 Length for Minimum Time (ft)	4 Time for Longer Length (sec)	100 FT	150 FT	200 FT	250 FT	300 FT	350 FT	400 FT	450 FT
4	1:53	597	.190L	1:53	1:53	1:53	1:53	1:53	1:53	1:53	1:53
6	2:50	398	.427L	2:50	2:50	2:50	2:50	2:50	2:50	2:51	3:12
8	3:47	298	.760L	3:47	3:47	3:47	3:47	3:48	4:26	5:04	5:42
10	4:43	239	1.187L	4:43	4:43	4:43	4:57	5:56	6:55	7:54	8:54
12	5:40	199	1.709L	5:40	5:40	5:42	7:08	8:33	9:58	11:24	12:50
15	7.05	159	2.671L	7:05	7:05	8:54	11:08	13:21	15:35	17:48	20:02
18	8:30	133	3.846L	8:30	9:37	12:49	16:01	19:14	22:26	25:38	28:51
21	9:55	114	5.235L	9:55	13:05	17:27	21:49	26:11	30:32	34:54	39:16
24	11:20	99	6.837L	11:24	17:57	22:48	28:30	34:11	39:53	45:35	51:17
27	12:45	88	8.653L	14:25	21:38	28:51	36:40	43:16	50:30	57:42	64:89
30	14:10	80	10.683L	17:28	26:43	35:37	44:31	53:25	62:19	71:13	80:07
33	15:35	72	12.926L	21:33	32:19	43:56	53:52	64:38	75:24	86:10	96:57
36	17:00	66	15.384L	25:39	38:28	51:17	64:06	76:55	89:44	102:34	115:23

In areas where ground water is known to exist, the Contractor shall determine the water elevation prior to running the test. The height of water over the invert of the pipe shall be divided by 2.3 to establish the pounds of pressure that will be added to all readings. For example, if the height of the water is 11-1/2 feet, then the added pressure will be 5 psig. This increases the 3.5 psig to 8.5 psig and the 3.0 psig to 8.0 psig. The allowable drop of one half pound and the timing remain the same. For safety reasons, do not exceed 9.0 psig.

If the installation fails to meet this requirement, the Contractor shall, at Contractor’s expense, determine the source of the leakage. Contractor shall then repair or replace all defective materials and/or workmanship. Air testing shall then be performed on the repaired line to meet the above specifications.

27.14 Television Inspection. Television inspection shall be required to determine if any defects exist prior to final acceptance. A minimum of 30 days shall lapse between completion of construction and television inspection.

Mobile closed circuit television inspection equipment shall be used to televise sewer lines between manholes. The camera shall be pulled through the line. Push type cameras are not acceptable. Robotic type camera equipment shall be used to televise stubouts.

The television camera used for the inspection shall be a color camera specifically designed and constructed for such inspection. Lighting for the camera shall be suitable to allow a clear picture for the entire periphery of the pipe. Picture quality and definition shall be satisfactory to the Engineer. Inspection operations shall cease if the quality of the image on the screen is unsatisfactory. No payment will be made for unsatisfactory inspections.

A continuous image for viewing shall be produced. The images shall be of first rate quality according to the currently accepted standards for television inspection of sewers. A system, which displays the camera location in feet on the monitor with respect to the starting manhole's centerline, shall be used. This system shall automatically update the camera location display as the camera is pulled forward or backward through the sewer line.

Measurement for location of observations to be recorded shall be made at the ground level by means of a meter device. Measurement meters shall be accurate to one-half (0.5) foot. Measurements shall be referenced from the center of the manhole where the camera is started to the center of the manhole where observations are terminated. The measurements shall be checked at the completion of the observations by measuring the distance between manhole centers at the ground level. The observed measurements made by the meter and the ground level measurements shall correspond to within plus or minus one foot. Surface measurements shall be made by the contractor in the presence of the Engineer's representative.

The television camera shall be moved through the line at a uniform slow rate. During the inspection the camera shall be stopped at the points where one or more of the following conditions are observed and distances recorded.

1. Service line tees, wyes or taps.
2. Infiltration/inflow sources.
3. Structural defects, including broken pipe, collapsed pipe, cracks, punctures, settling, etc.
4. Abnormal joint conditions, such as horizontal and vertical misalignment, open joints, joints not fully sealed, etc.
5. Unusual conditions.

All such conditions shall be photographed as determined by the Engineer. Photographs of all questionable conditions shall be taken for subsequent review. The photographs shall be taken from the image on the TV monitor with a Polaroid, a 35 mm camera, or other approved methods. Before taking the photographs, the TV camera shall be properly positioned so the optimum view can be obtained. The image size of photographs shall be no smaller than three inches by four inches.

All photographs shall be identified by location, date taken, and names of the owner's and Contractor's representative. The location of all photographs shall be identified by recording the distance from each defect or point of interest to the center of the reference manhole. All photographs shall be submitted as specified.

A DVD/CD with a clear and audible voice narrative of the entire TV monitoring shall be furnished. Each disk will be delivered to the Engineer in charge. Each disk shall be titled on the screen with the date, manhole numbers, pipe size, district or project number. The camera shall be set to begin at the center of the manhole and the footage zeroed out.

The title shall change at each manhole and the footage zeroed out again before starting a new pull when more than one section of sewer is televised in succession. Defects in the sewer line shall be repaired or replaced by the Contractor, as directed by the Engineer, at no cost to the City.

One bound copy of the final inspection report shall be submitted to the Engineer. Included in the report shall be a map showing the work area, a wye location report, a television inspection report, and a DVD/CD and all pictures.

Television inspection shall be measured and paid for on the basis of unit price as set forth in the bid. Such unit price payment shall be full compensation for all reports, photographs, and other work related work to complete the closed circuit television monitoring.

Revised 1-18-2010

27.15 Exposure of Pipe or Manholes. The Contractor shall conduct the work at all times in such a manner as will insure no disruption to the normal function of the sanitary sewer collection system. Particular attention shall be paid to the threat of introduction of storm water or other waters to the piping and manholes of the collection system. The Contractor shall take whatever precautions are necessary, such as, but not limited to, installation of plugs in exposed pipes and manholes when work is not in progress or when leaving the work site. The Contractor will be held responsible for damages which may occur to either the collection system or to private property through introduction of storm water or other waters to exposed piping or manholes relating to the construction work.

SECTION 28 - DRAINAGE STRUCTURE CONSTRUCTION

28.01 Concrete Work. The construction of forms, mixing, placing, finishing, and curing of concrete work, as well as the fabrication, placement, protection, and cleaning of reinforcement, shall conform to the applicable parts of Division II, Portland Cement Concrete Pavement.

28.02 Brick Work. All brick shall be wetted before being laid in a 1:2 cement mortar. All joints shall be completely filled with mortar and shall not be less than 1/4 inch and not more than 1/2 inch in thickness. The joints shall be completely filled, smooth and free from surplus mortar on the inside of the walls. Bricks shall be laid radically with every sixth course laid as a stretcher course. Brick shall be plastered with 1/2 inch of mortar over the entire outside surface of wall.

28.03 Precast Manhole Sections. Precast concrete sections for manholes shall be installed with bituminous joint filler.

28.04 Acceptance. Upon completion of a job, all debris and surplus materials shall be removed from the job by the Contractor. The Engineer shall be notified, and shall make an inspection of the work. The City will be notified in writing as to the acceptability of the work.

Prior to City acceptance all storm and sanitary sewers will be televised by the City. Payment will be per foot for televising. Fifteen (15) days after any dewatering wells have been turned off the televising can be performed.

Any cleaning performed by the City will be charged by the hour to the Contractor.

Revised 1-18-2010

SECTION 29 - METHOD OF MEASUREMENT AND BASIS OF PAYMENT

29.01 Sewer Pipe in Place. Sewer pipe shall be measured and paid for at the contract unit price per lineal foot for various sizes including excavation and backfill complete in place. Sewer pipe shall be measured for payment after installation of the sewer through all line manholes and through the walls of structures and existing manholes and shall include the portion of all wyes considered as main line sewer. Such payment shall be full compensation for all labor, plant, equipment, and materials necessary for a complete and acceptable project, including removal of all debris and final cleanup of the job.

29.02 Wyes. Wyes shall be paid for at the contract unit price for various size wyes. Measurement for payment shall include that portion of the wye from the barrel of the main line sewer to the end of the wye. A 1" x 4" lumber sufficient in length to reach the ground surface shall be placed vertically at the end of each wye.

29.03 Manholes. Manholes shall be paid for at the contract unit price bid per manhole for a depth of five (5) feet which payment shall include base, stubouts, and ring cover. Additional payment shall be made for manholes more than five (5) feet in depth, measured from flow line to top of cover, at the contract unit price for each vertical foot or fraction thereof in excess of five (5) feet.

29.04 Storm Sewer Inlets. Storm sewer inlets shall be paid for at the contract unit price bid per inlet.

City of Grand Island, NE

DIVISION VI

WATER MAINS

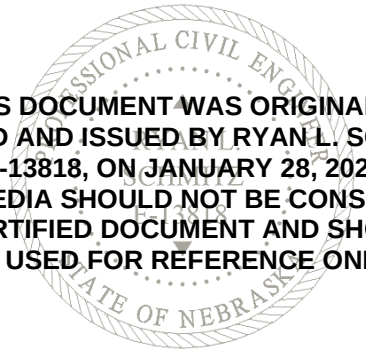

THIS DOCUMENT WAS ORIGINALLY SEALED AND ISSUED BY RYAN L. SCHMITZ E-13818, ON JANUARY 28, 2020 THIS MEDIA SHOULD NOT BE CONSIDERED A CERTIFIED DOCUMENT AND SHOULD BE USED FOR REFERENCE ONLY.

DIVISION VI
WATER MAINS

C O N T E N T S

REFERENCES AND DEFINITIONS

ANSI	American National Standards Institute
ASME	American Society of Mechanical Engineers
ASTM	American Society for Testing Materials
AWS	American Welding Society
AWWA	American Water Works Association
DIPRA	Ductile Iron Pipe Research Association
EPA	Environmental Protection Agency
NDEQ	Nebraska Department of Environmental Quality
DW-NOI	Dewatering Notice of Intent
NPDES	National Pollution Discharge Elimination System
mg/L	Milligrams per Liter
psi	Pounds per Square Inch
UNS	Unified Numbering System
UHMW	Ultra High Molecular Weight

Section	Description
30	**SCOPE OF WORK**
31	**MATERIALS**
31.00	Materials
31.01	Ductile Iron Pipe
31.02	Fittings
31.03	Coatings and Linings
31.04	Gate Valves
31.05	Butterfly Valves
31.06	Tapping Sleeves and Tapping Valves
31.07	Water Main Valves Boxes
31.08	Swivel Fittings
31.09	Sleeve Couplings
31.10	Fire Hydrants
31.11	Structural Concrete
31.12	“No-Lead Brass” Fittings and Valves
31.13	Corporation Stop
31.14	Curb Stop
31.15	Water Service Valve Box
31.16	Copper Pipe
31.17	Service Saddle

DIVISION VI
WATER MAINS

C O N T E N T S C O N T I N U E D

Section	Description
31.18	Not Used
31.19	Solid Sleeve
31.20	Restrained Couplings and Glands
31.20.1	Retainer Glands
31.20.2	Anchor Couplings
31.20.3	Ultra-Compact MJ Restraint
31.20.4	Hydrant Offset Adapter
32	**CONSTRUCTION METHODS**
32.00	Project Supervision
32.01	Excavation
32.02	Protection of Existing Utilities
32.02.1	Excavating Under Existing Water Line
32.03	Tunneling
32.04	Pipe Cutting
32.05	Installation
32.06	Manholes
32.07	Service Interruptions
32.07.1	Connection to City Mains
32.07.2	Line Stoppers
32.08	Valve Boxes
32.09	Pressure and Leakage Tests
32.10	Sterilization, Flushing, and Sampling of Lines
32.10.1	Contractor's Expense
32.11	Tapping of Water Mains
32.12	Separation from Sanitary Sewer and / or Storm Sewer Lines (Sewers)
32.12.1	Separation from Storm Water Drain-Ways
32.12.2	Separation from Sanitary Sewer/Storm Sewer/ Other Utility Lines
32.13	Backfilling
32.13.1	Compaction Testing
32.14	Backfilling Under Pavement
32.15	Nonshrinkable Backfill
32.16	Acceptance
32.17	Water Services
32.17.1	Service Ownership
32.18	Water Meter Installations
32.18.1	Meter Ownership
32.18.2	Meter Pits and Vaults Prohibited
32.19	Fire Hydrant
32.20	Relocation of Mains and Service Lines

DIVISION VI
WATER MAINS

C O N T E N T S C O N T I N U E D

Section	Description
32.20.1	Pressure and Leakage Testing of Relocated Mains and Service Lines
32.20.2	Sterilization, Flushing and Sampling of Relocated Mains and Service Lines
32.20.3	Water Services on Relocated Mains
32.20.4	Abandonment of Service Pipes on Relocated Mains
33	**METHOD OF MEASUREMENT AND BASIS OF PAYMENT**
33.01	Water Main
33.02	Valves and Boxes
33.03	Hydrants
33.04	Manholes
33.05	Fittings
33.06	Concrete Blocking
33.07	Corporation Stop
33.08	Curb Stop
33.09	Water Services
34	**POLYETHYLENE ENCASEMENT**
34.01	Scope of Work
34.02	Materials
34.03	Installation
34.03.1	Method “A”
34.03.2	Method “B”
34.03.3	Method “C”
34.03.4	Appurtenances
34.03.5	Repairs
34.03.6	Openings in Encasement
34.03.7	Junctions between wrapped and unwrapped pipe
34.03.8	Backfill for polyethylene pipe
35	**UNDERCROSSING**
35.01	Scope of Work
35.02	Material
35.03	Procedure
35.04	Protection of Public
35.05	Installation of Casing
35.06	Excavation
35.07	Backfilling
35.08	Carrier Pipe
35.08.1	Carrier Pipe - Casing Spacers

DIVISION VI
WATER MAINS

C O N T E N T S C O N T I N U E D

Section	Description
35.08.2	Carrier Pipe – Installation
35.08.3	Carrier Pipe – Casing End Seals
36	**DEWATERING**
36.01	General
36.02	Discharge Permit
36.03	Dewatering Wells
37	**TRENCHLESS INSTALLATION OF WATER MAIN**
37.01	General
37.01.1	Permits
37.01.2	Site Investigation
37.02	Materials
37.02.1	Restrained Joint Pipe
37.02.2	Pulling Heads
37.02.3	Polyethylene Encasement
37.03	Pipe installation
37.03.1	Drilling System
37.03.2	Guidance System
37.03.3	Drilling Fluid System
37.03.3.1	Drilling Fluid
37.03.4	Excavations
37.03.5	Pilot Hole
37.03.6	Alignment
37.03.7	Installation – Cartridge Method
37.03.8	Pull-Back
37.03.9	Pulling Force
37.03.10	Backfill and Clean-Up
37.04	Records and Measurements
37.04.1	Records
37.04.2	Measurement for Payment

DIVISION VI
WATER MAINS

This division is written so that ordinarily the type of construction described is complete, but, where applicable, other divisions are considered a part of this specification. All City of Grand Island Standard Plans are to be considered part of this document.

All work to be done must adhere to current AWWA standards or City of Grand Island Division VI specifications whichever is more restrictive.

SECTION 30 - SCOPE OF WORK

The work covered by this division of the specifications consists of furnishing all labor, plant, equipment, appliances, and materials, and performing all operations necessary to construct and complete water mains and appurtenances in strict accordance with these specifications, the applicable drawings, and subject to the terms and conditions of the contract.

SECTION 31 - MATERIALS

31.00 Materials. Materials shall comply with the requirements of the United States of America Safe Drinking Water Act, other federal regulations for potable water systems, and these specifications as applicable. All materials shall be new and unused, and shall conform to the following specifications.

31.01 Ductile Iron Pipe. All pipe shall be ductile iron and shall conform to the AWWA Standard, *DUCTILE-IRON PIPE, CENTRIFUGALLY CAST*, ANSI/AWWA C151/A21.51 and subsequent revisions; and the T*HICKNESS DESIGN OF DUCTILE-IRON PIPE*, ANSI/AWWA C150/A21.50 and subsequent revisions or as otherwise shown on the plans.

All pipe three (3) inch diameter to twenty-four (24) inch diameter shall have a nominal length of not less than eighteen (18) feet and be designed for a working pressure of 350 psi with a standard pipe thickness in accordance with Pressure Class 350.

All pipe thirty (30) inch diameter and greater shall have a nominal length of not less than eighteen (18) feet and be designed for a working pressure of 250 psi with a standard pipe thickness in accordance with Pressure Class 250. Mechanical joint pipe, pipe sockets flanges, packing glands, gaskets, and bolts shall conform to the AWWA Standard, *DUCTILE-IRON PRESSURE PIPE AND FITTINGS,* ANSI/AWWA C111/A21.11 and subsequent revisions, and supplied with ductile iron glands as per ASTM A536.

Boltless gasketed joint pipe with the exception of jointing facilities shall conform to the AWWA Standard, *RUBBER-GASKET JOINTS FOR DUCTILE-IRON PRESSURE PIPE AND FITTINGS*, ANSI/AWWA C111/A21.11 and subsequent revisions. Pipe bells shall be grooved or otherwise recessed for gasket sealing and anchorage with reasonably close clearance between pipe bell and adjacent spigot surfaces. The design of the joint shall be such that a deflection of up to three degrees is allowable. All necessary gaskets and gasket lubricants shall be the type recommended and supplied by the pipe manufacturer.

Boltless gasketed joints shall be sealed with a continuous ring gasket manufactured for the use and service and shall seal the joint tight under all operating conditions, including water hammer and pipe movements due to expansion, contraction, and normal settlement. The physical properties and design of the gasket shall be such that they will remain in proper

position in the pipe joints under maximum internal pressure and joint deflection conditions. The composition and physical properties of the gaskets shall be submitted to and approved by the Engineer prior to delivery and installation.

31.02 Fittings. All pipe fittings three (3) inch diameter to twenty-four (24) inch diameter shall be Pressure Class 350 and all pipe fittings thirty (30) inch diameter and greater shall be Pressure Class 250. All fittings shall be ductile iron, mechanical joint, and shall conform to the AWWA Standard, *DUCTILE-IRON AND GRAY-IRON FITTINGS*, ANSI/AWWA C110/A21.10 and subsequent revisions.

Compact ductile-iron, mechanical joint fittings, three (3) inch diameter through twenty-four (24) inch diameter shall conform to the AWWA Standard, *DUCTILE-IRON COMPACT FITTINGS*, ANSI/AWWA C153/A21.53 and subsequent revisions, and designed for a working pressure of 350 psi.

All joint sockets, socket flanges, packing glands, gaskets, and bolts shall conform to the AWWA Standard, *RUBBER-GASKET JOINTS FOR DUCTILE-IRON PRESSURE PIPE AND FITTINGS,* ANSI/AWWA C111/A21.11 and subsequent revisions. Mechanical and push-on joints shall have the same pressure rating as the pipe or fitting of which they are a part. All fittings shall be supplied with ductile iron glands as per ASTM A536 and all required connecting bolts, nuts, glands, gaskets, and accessories.

Unless otherwise specified all bolt holes shall straddle the vertical centerline of all mechanical joint flanges, fittings, valves, and hydrants. (The vertical centerline of a fitting is determined when the fitting is in the position to change the direction of the fluid flowing in a horizontal plane.)

31.03 Coatings and Linings. The interior surfaces of all pipe and fittings shall be cement mortar lined in accordance with ASTM C150 and shall conform to the AWWA Standard, *CEMENT-MORTAR LINING FOR DUCTILE-IRON PIPE AND FITTINGS FOR WATER,* ANSI/AWWA C104/A21.4 and subsequent revisions. All cement mortar lining shall be coated with asphaltic seal coat in conformity with the referenced standard specifications.

The exterior of all pipe fittings and interior surface of bells not cement mortar lined, shall be coated with a bituminous pipe coating of a type acceptable to the Engineer. The coating shall dry to a smooth, glossy surface, shall not be brittle when cold or sticky when exposed to the sun, and shall adhere to the pipe at all temperatures. Coating shall be free from blisters and holidays. Coatings and linings shall conform to all subsequent revisions of the cited specifications.

31.04 Gate Valves. All valves up to and including twelve (12”) inch diameter shall be ductile-iron or cast-iron body, resilient wedge gate valves, and shall conform to the AWWA Standard, *RESILIENT-SEATED GATE VALVES FOR WATER SUPPLY SERVICE*, ANSI/AWWA C509 and subsequent revisions. Valves shall have mechanical joint ends, 2” square operating nut for key operation and “0” ring type stem seals. All valves shall open counterclockwise and be of the non-rising stem type. The valve sealing mechanism shall be a wedge design of ductile-iron or cast-iron, completely encapsulated with a molded resilient covering permanently bonded to the iron wedge to meet ASTM D429 testing. The sealing mechanism shall be designed to provide zero leakage at a minimum of 200 psi operating pressure, with flow in either direction. All valves shall have a full unobstructed waterway, coated with a corrosion resistant material free of cavities or projections conforming to the AWWA Standard, *PROTECTIVE EPOXY INTERIOR COATINGS FOR VALVES AND HYDRANTS,* ANSI/AWWA C550 and subsequent revisions. All valves shall be furnished with all required connecting bolts, nuts, glands, gaskets, and accessories.

Unless otherwise specified, all bolt holes shall straddle the vertical centerline of all mechanical joint flanges, fittings, valves, and hydrants. (The vertical centerline of a fitting is determined when the fitting is in the position to change the direction of the fluid flowing in a horizontal plane.)

Valves shall be manufactured by American®, Clow Valve Co.®, Kennedy Valve®, or Mueller Co.®.

31.05 Butterfly Valves. All valves, fourteen (14) inch diameter and larger, shall be rubber seated butterfly valves and shall conform to the AWWA Standard, *RUBBER-SEATED BUTTERFLY VALVES 3" In THROUGH 72 In,* ANSI/AWWA C504 and subsequent revisions, with heavy duty cast iron or ductile-iron bodies. The valves shall be designed for a working pressure of 150 psi. Each valve shall have mechanical joint ends, a suitable heavy reliable operator with more than adequate strength for the torque involved, and a 2" square operating nut for key operation. The operators and shafts shall be fully grease-packed and sealed for life and shall be suitable for direct burial. Valves shall be furnished with standard AWWA nuts and stainless steel shafts or high tensile carbon steel. All valves shall be furnished with all required connecting bolts, nuts, glands, gaskets, and accessories and open counterclockwise.

Valves shall be Henry Pratt® Groundhog butterfly valves or Mueller® Lineseal III butterfly valves.

31.06 Tapping Sleeves and Tapping Valves. All tapping sleeves shall be either ductile-iron body, mechanical joint, or 304 stainless steel body, full circumferential seal with carbon steel flange, ductile iron or stainless steel flange. All tapping sleeves shall be furnished with all required connecting bolts, nuts, glands, gaskets, and accessories.

Ductile iron body tapping sleeves shall be: American® Series 2800-C tapping sleeve; Kennedy Valve® tapping sleeve, or Mueller Co.® H-615 tapping sleeve.

Stainless steel body tapping sleeves shall be manufactured in compliance with AWWA Standard C223; and shall be: Ford Meter Box Co.® "Fast" with carbon steel flange; Romac Industries, Inc® "SST" with ductile flange; Mueller Co.® "H-304" with carbon steel or ductile flange; or Smith Blair ® 662 with carbon steel flange.

All tapping valves shall conform to the AWWA Standard, *RESILIENT-SEATED GATE VALVES FOR WATER SUPPLY SERVICE*, ANSI/AWWA C509 and subsequent revisions. Valves shall have a 2" square operating nut for key operation and "0" ring type stem seals. All valves shall open counterclockwise and be of the non-rising stem type. The valve sealing mechanism shall be a wedge design of ductile-iron or cast-iron, completely encapsulated with a molded resilient covering permanently boned to the iron wedge to meet ASTM D429 testing. The sealing mechanism shall be designed to provide zero leakage at a minimum of 200 psi operating pressure, with flow in either direction. All valves shall have a full unobstructed waterway, coated with a corrosion resistant material free of cavities or projections conforming to the AWWA Standard, *PROTECTIVE INTERIOR COATINGS FOR VALVES AND HYDRANTS,* ANSI/AWWA C550 and subsequent revisions.

Unless otherwise specified, all bolt holes shall straddle the vertical centerline of all mechanical joint flanges, fittings, valves, and hydrants. (The vertical centerline of a fitting is determined when the fitting is in the position to change the direction of the fluid flowing in a horizontal plane.)

Tapping valves shall be: American® Series 2500 tapping valve; Kennedy Valve® tapping valve, Clow Valve Company Model 2639, or Mueller Co.® T- 2362 tapping valve.

31.07 Water Main Valve Boxes. All buried valves installed in lines larger than 2" dia., shall be provided with cast iron, "Buffalo" type, valve boxes. Valve boxes shall have a two-piece screw-type extension sleeve and be intended for the size of valve on which it is to be used and for the

depth of cover as required. The box's lid shall have the word "WATER" cast thereon. Valve boxes shall be size 664-S: "Tyler Union – series 6850, SIP Industries – series 6013; or Star Pipe Products – series VB-0001.

Valve box extensions shall be cast iron, screw-type: Tyler Union – series 6850 boxes; SIP Industries – series 6118; or Star Pipe Products – series VBES24S.

31.08 Swivel Fittings. MJ x Swivel fittings shall meet all requirements of section "31.02 Fittings" and shall have prior approval of the Utilities Dept. before installation.

31.09 Sleeve Couplings. Sleeve couplings shall conform to the AWWA Standard, *BOLTED, SLEEVE-TYPE COUPLINGS FOR PLAIN-END PIPE,* ANSI/AWWA C219 and subsequent revisions, and have an inside diameter suitable for connecting ductile iron pipe to ductile iron pipe or cast iron pipe to cast iron pipe. The center sleeve shall be ductile iron ASTM A-536, grade 65-45-12. Ends shall have a smooth inside taper for uniform gasket seating. End rings shall be ductile iron ASTM A-536, grade 65-45-12. Couplings shall be furnished complete with gaskets, bolts, and nuts conforming to the AWWA Standard, RUBBER-GASKET JOINTS FOR DUCTILE-IRON PRESSURE PIPE AND FITTINGS, ANSI/AWWA C111/A21.11 and subsequent revisions, and without pipe stops. All materials shall be designed for 250 psi working pressure with the resulting seal flexible and bottle-tight.

Sleeve couplings shall be: Romac Industries, Inc® 501, Smith Blair ® 442, Hymax® 2 Wide-Range, or Romac Alpha, The center sleeve shall have a minimum Length as determined by the table below:

	Pipe Diameter	Minimum Sleeve Length Required
Romac 501	3" to 12"	7"
Romac 501	> 12"	14"
Smith Blair 442	4" to 8"	7"
Smith Blair 442	> 8"	14"
Hymax 2	4" to 12"	7"
Romac Alpha	4" to 12"	7"

31.10 Fire Hydrants. Fire hydrants shall conform to the AWWA Standard, *DRY-BARREL FIRE HYDRANTS,* ANSI/AWWA C502 and subsequent revisions. Hydrants shall be manufactured with "O" ring packing, 5-1/4" valve opening, 6" stand pipe, 6" mechanical joint inlet, two 2-1/2" hose connections (nozzle) with 3-1/16" OD and 7-1/2 threads per inch NST and one 4-1/2" pumper connection (nozzle) with 5-3/4" OD and 4 threads per inch NST. Hydrants shall have a 1-1/2" pentagonal operating and nozzle cap nuts which open left or counterclockwise.

Fire hydrants shall be furnished with all the required connecting bolts, nuts, glands, and gaskets. Unless otherwise specified, all bolt holes shall straddle the vertical centerline of all mechanical joint flanges, fittings, valves, and hydrants. (The vertical centerline of a fitting is determined when the fitting is in the position to change the direction of the fluid flowing in a horizontal plane).

Fire hydrants shall be factory painted as per City requirements with an industrial enamel exterior grade paint. Public fire hydrants shall be painted to have yellow barrels with red caps and bonnet; private fire hydrants shall be painted solid red. Colors shall be Guardsman Yellow #760-4004-00 and Red #760-7008-00, or Sherwin Williams Yellow #F77Y9 and Red #77R7, or Glidden Yellow #4540 and Red #4520.

Hydrants shall be: American-Darling B-62-B-5 hydrant with five and a half foot bury; or Kennedy Guardian K-81D hydrant with five foot bury; or Mueller Centurion A-423 3-way hydrant with five foot bury.

31.11 Structural Concrete and Pavement. All concrete shall be type 47-B (modified) air-entrained as specified in City of Grand Island Specifications, Division II, "PORTLAND CEMENT CONCRETE PAVEMENT" or 47B-HE-3500 (high early) as specified in the latest revision of the Nebraska Department of Transportation Standard Specifications for Highway Construction Finish can be either broomed or burlapped.

When average daily temperatures are below 40°F (4.5°C) for more than three consecutive days, the Contractor shall use approved practices and procedures that will assure that placed concrete will be sufficiently strong and durable to fully meet design requirements. The use of insulating coverings, accelerating admixtures, high-early strength cement, or additional cement may be used to develop the level of strength required. All such methods shall fully conform to the American Concrete Institute's Guide to Cold Weather Concreting (ACI 306R-16). There shall be no additional payment if such cold weather techniques are required.

31.12 "No-Lead Brass" Fittings and Valves. This specification shall apply to any waterworks brass goods, such as corporation stops, curb stops, coupling, connectors, nipples, etc. All such goods shall comply with the United States Of America Safe Drinking Water Act, and the U.S. Environmental Protection Agency.

The brass part of any fitting or valve in contact with potable water shall be made of a "No-Lead Brass", and shall conform to UNS Copper Alloy No. C89520 or C89833 in accordance with the chemical and mechanical requirements of ASTM B584 and AWWA Standard, UNDERGROUND SERVICE LINE VALVES AND FITTINGS, ANSI/AWWA C800 with a maximum lead content of 0.25% by weight.

All brass fittings and valves shall have the manufacturers name or trademark permanently stamped or cast on it. Additional marking such as "NL", "EBII", "FD" or other commonly accepted identifier, indicating the alloy as "No-lead" shall also be cast or stamped into the fitting or valve.

31.13 Corporation Stop. All corporation stops ¾", 1", 1-1/2", or 2" in size, shall be Ford Meter Box Co.® FB1000-NL ball valve; A.Y. McDonald Co.® 74701B-22 ball valve; or Mueller Co.® 300-N ball valve.

31.14 Curb Stop. All curb stops ¾", 1", 1-1/2", or 2" in size, shall be Ford Meter Box Co.® B44-NL ball valve; A.Y. McDonald Co ® 76100-22 ball valve; or Mueller Co. ® 300-N ball valve.

31.15 Water Service Valve Box. Curb stops in service lines 2" dia. or smaller, shall be provided with cast iron, two-piece screw-type, size 94-E valve boxes. The box's lid shall have the word "WATER" cast thereon and supplied with a standard pentagon head brass screw.

An enlarged base shall be used with a complete service box for all 1-1/2" and 2" curb stops.

Service boxes shall be: Tyler Union – 6500 series; SIP Industries – series 6359; or Star Pipe Products – series SB-0001.

31.16 Copper Pipe. All water service lines ¾", 1", 1-1/2", or 2" in size, shall be flexible Type "K" soft copper pipe.

31.17 Service Saddle. All service saddles shall conform to the AWWA Standard, *UNDERGROUND SERVICE LINE VALVES AND FITTINGS,* ANSI/AWWA C800 and subsequent revisions, and as additionally specified herein.

The saddle body shall be, high strength ductile-iron per ASTM A536, hot dipped zinc galvanized or enamel coated, with outlet tapped for CC taper threads, and a steel double strap design for use on cast iron or ductile-iron pipe. A service saddle shall be required for 1-1/2" and larger service taps on all mains regardless of thickness class.

All service saddles shall be Ford Meter Box Co.® F202; Mueller Co.® DR2A; Romac Industries, Inc® 202NS; or A.Y. McDonald Co.® 4825A.

31.18 Not Used

31.19 Solid Sleeve. Compact ductile-iron sleeves, three (3) inch through forty-eight (48) inches shall conform to the AWWA Standard, *DUCTILE-IRON COMPACT FITTINGS*, ANSI/AWWA C153/A21.53 and subsequent revisions.

All sleeves three (3) inches to twenty-four (24) inches shall be designed for a working pressure of 350. All pipe thirty (30) inches and greater shall be designed for a working pressure of 250. The center sleeve shall have a minimum of a twelve inch (12") wide body and be furnished complete with gaskets, bolts, and nuts.

31.20 Restrained Couplings and Glands. With prior approval from the Utilities Department, mechanical joint restraint couplings and glands may be used on fittings, valves, and pipe in lieu of concrete thrust blocks; however, thrust blocks will be required where indicated on plans.

31.20.1 Retainer Glands. All retainer glands shall be ductile iron conforming to ASTM A536 and designed for a working pressure rating of 350 psi. Glands shall have a wedge style design and torque limiting bolts to fully restrain the fitting and pipe together.

Retainer glands shall be "EBAA Iron, Inc. – Megalug series 1100", "Romac Industries, Inc. – RomaGrip", "Star Pipe Products – series 3000"; "Tyler Union – TufGrip series 1000" or "SIP Industries – EZ Grip".

31.20.2 Anchor Couplings. Anchoring couplings shall be a ductile iron fitting, which provides a restrained connection without the use of braces or blocking and designed to prevent the joint from separating under pressure when all bolts are in place. It shall have a pressure rating of 350 psi; be equipped with freely moving, 360° rotatable couplings conforming to ASTM A536; and manufactured to fit standard mechanical joint connections.

31.20.3 Ultra-Compact MJ Restraint. The connector shall be an ultra-compact, bolt-through mechanical joint restraint, for 4", 6", and 8" valves and fittings, manufactured of ductile iron, cement-lined inside, asphalt-coated for corrosion protection, and conform to AWWA Standards, ANSI/AWWA C153/A21.53 and ANSI/AWWA C104/A21.4 and have a working pressure rating of 350 psi.

The bolt-through, positive restraint device shall connect valves and fittings at a linear distance not to exceed one (1) inch and without attachment to the pipe; (the device shall not be used directly on fire hydrant shoes).

Connector shall be furnished complete with all gaskets and bolts, and be "Infact Corporation, Foster Adaptor" or approved equal.

31.20.4 Hydrant Offset Adapter. Offset adapters shall be manufactured of ductile iron, cement-lined inside and asphalt-coated for corrosion protection, and conform to AWWA Standards: ANSI/AWWA C153/A21.53 and ANSI/AWWA C104/A21.4 and have a pressure

rating of 350 psi. The adapter shall provide a restrained joint and alignment adjustment in a single fitting, allowing fire hydrants to be set to grade without extension kits. Adapters shall come complete with all gaskets, bolts, and rotatable split-retainer glands.

Hydrant offset adapters shall be: Assured Flow Sales, Inc. – Gradelok.

SECTION 32 – CONSTRUCTION METHODS

32.00 Project Supervision. The general contractor shall be required at all times during construction activities to have a designated Project Supervisor at the work site.

The *Project Supervisor* shall be experienced in all aspects of the project and will be responsible for on-site, day-to-day management of the project.

The Project Supervisor shall have:

- Practical written and verbal communication skills of the English language.
- Ability to read, understand, and accurately interpret the contract documents, plans, specifications, and survey stakes prepared for the project.
- Skilled knowledge of construction techniques.
- Ability to supervise the entire construction crew, including sub-contractors.
- The experience and ability to identify existing and predictable hazards in the surroundings or working conditions, and the authority to take prompt corrective measure to resolve problems and / or eliminate them.
- A set of contract documents, plans and specifications at the work site.

If the Contractor's *Project Supervisor* is not at the work site, the Utilities Dept. representative shall notify the Contractor and all construction activities shall cease until such time as a qualified replacement arrives on site. No claims for financial adjustment due to inadequate project supervision shall be permitted by the City.

32.01 Excavation. The Contractor shall perform all excavation of whatever substances encountered to the depth shown on the drawings or to provide a minimum cover of five (5) feet over the top of the pipe. The Engineer shall have the right to limit the amount of trench that may be opened in advance of the line of work.

All excavated materials not required for backfill shall be removed from the project by the Contractor. Banks of trenches shall be kept as nearly vertical as practicable and, where required, shall be properly sheeted and braced. Trenches shall be of sufficient width to provide working space for proper installation.

The bottom of the trenches shall be accurately graded to provide uniform bearing and support for each section of pipe on undisturbed soil at every point along its entire length, except for portions of the pipe sections where it is necessary to excavate for bell holes.

Whenever wet or unstable soil that is incapable of properly supporting the pipe, as determined by the Engineer, is encountered in the trench bottom, such soil shall be removed to the depth and length determined by the Engineer and the trench backfilled to grade with sand, gravel, or other suitable material.

All grading in the vicinity of trench excavation shall be controlled to prevent surface water from flowing into the trench. Any water accumulating in the trench shall be removed by pumping or other approved method. Material excavated from the trenches shall be stacked in an orderly manner a sufficient distance back from edge of trenches to avoid overloading and preventing slides or cave-ins. Materials unsuitable for backfilling shall be wasted by the Contractor as directed by the Engineer. Any unauthorized excavation below grade shall be backfilled at the Contractor's expense with good, well-tamped material.

A minimum of one foot of topsoil (unless otherwise noted on the plans) shall be removed in any and all areas covered by vegetation. This topsoil shall be stockpiled separately from the material removed from the remainder of the trench. After the pipe is installed and the trench backfilled to an elevation one foot (unless otherwise noted on the plans) below grade, the topsoil shall be replaced and compacted as previously described.

Excavation will not be classified. Whatever material is encountered shall be excavated to the proper grades and, if in any locations such material is not sufficient to provide a uniform even bed for the pipe, the trench shall be excavated at least three (3) inches deeper than the grade at the bottom of the pipe and the space thus excavated shall be refilled with earth or sand and thoroughly compacted.

32.02 Protection of Existing Utilities. The accuracy of location of existing underground utilities as shown on the plans is not guaranteed. It shall be the duty of the Contractor to locate these utilities in advance of excavation and to protect same from damage after uncovering. No house service lines are shown on the plans. The Contractor shall contact the owners of the utilities for assistance in locating these service lines. Any expense incurred by reason of damaged or broken lines shall be the responsibility of the Contractor.

32.02.1 Excavating Under Existing Water Line. When crossing under an existing water line, in order to install sanitary sewer or other utilities, a pipe support detail must be provided as part of the plan set prior to construction. This crossing detail must be sealed by an engineer licensed in the State of Nebraska.

32.03 Tunneling. Tunneling, when necessary, shall be done under the supervision of the Engineer. Refer to Section 35 – UNDERCROSSING.

32.04 Pipe Cutting. Cutting of the pipe shall be kept to a minimum and shall be done in a neat and workmanlike manner without damage to the pipe. Unless otherwise authorized by the Engineer, cutting shall be done by means of an approved type of mechanical cutter. Wheel cutters shall be used when practicable. Cut pipes between mechanical joint fittings, “nipples”, shall be no less than 18” in length. Cut pipe with either bell or spigot ends shall be no less than 48” in length.

32.05 Installation. Pipe and accessories shall be handled in such manner as to insure delivery to the work in a sound, undamaged condition.

While suspended in a sling and before lowering into the trench, all pipe shall be inspected for defects. Defective, damaged, or unsound pipe will be rejected. Deflections from a straight line or grade, as required by vertical or horizontal curves, shall not exceed manufacturer’s recommendations and approval by Engineer.

Mechanical joints shall be installed under the provisions of the recommendations of the joint manufacturer. Fittings at bends or deadends shall be firmly blocked against the vertical face of the trench to prevent fittings from being blown off the lines when under pressure. Blocking shall conform to the plan for concrete blocking for fittings. Where pipe ends are left for future connections, they shall be valved, plugged, or capped as shown on the plans. Where connections are made between new work and existing mains, the connections shall be made by using fittings as required.

32.06 Manholes. Manholes shall be constructed as indicated on Standard Plan Drawings, No. 135 or 136, or as otherwise shown on the plans. Floors of the manholes shall be earth. Manholes over three (3) feet in depth shall be equipped with cast iron steps placed on approximately sixteen (16) inch centers.

32.07 Service Interruptions. When it becomes necessary for the purpose of making connections or for any other reason to shut off or turn on water in any existing mains, it is the sole responsibility of the Contractor to notify the City Water Department through the resident Engineer a minimum of 24 hours in advance as to when and for how long service will be interrupted and also to notify all water users well in advance so they might prepare themselves for the period during which service might be interrupted. Valves shall not be opened or closed by anyone other than City Water Department personnel.

32.07.1 Connection to City Mains. Newly installed piping shall not be connected to existing City mains until acceptance of all pressure and bacteria tests, unless otherwise noted on the plans. Test plugs, corporations, connecting sleeves, dewatering, and temporary piping to a water source, shall be furnished and installed by the Contractor.

City reserves the right to inspect the installation of all private water lines 2" or larger. Contractor must notify Utility Engineering Manager at least 48 hours in advance of installing and pipe, fittings, or appurtenances.

32.07.2 Line Stoppers. When necessary to isolate sections of water lines for maintenance, repairs, lowering, or for other reasons when service interruptions in an existing main are not allowed, line-stoppers shall be used to eliminate system shut-down.

Line-stoppers shall be defined as a complete modular system of equipment specifically designed for plugging water lines in order to temporarily stop the flow of water as may be required for repair, replacement, and / or relocation of water main components. The flow control device shall be inserted at normal water main pressure.

Line-stoppers, inserted into mains twenty inch (20") dia. or smaller, shall be furnished and installed by the Grand Island Water Department. The actual material expense and labor costs associated with the use of such line-stoppers shall be charged to the Contractor.

In water lines larger than twenty inch (20") dia., the Contractor shall make arrangements for line-stoppers to be furnished and installed by a firm specializing in their use, with extensive experience in their equipment's operation. Prior to installation, all devices shall be thoroughly checked, cleaned, and sanitized by the Contractor. The City's Water Department shall inspect all equipment and issue final approval before installation of line-stoppers.

The Contractor shall be responsible for all excavations and properly maintaining trench banks, sheeting, and bracing as required. Trenches shall be of sufficient width to provide proper working space. After the work is completed, the Contractor shall backfill the trench with suitable compacted materials as specified.

32.07.3 12" and Larger Water Main Outage. Water mains 12" and larger in size shall not be taken out of service for construction or relocation from May 1st to September 30th. Any outage of shall be at the discretion of the Utilities Department.

32.08 Valve Boxes. Valves and valve boxes shall be installed in the lines as shown on the drawings and as directed by the Engineer. They shall be set plumb and centered with valve boxes placed directly over the valves. Earth fill shall be carefully tamped around all valve boxes. Valve boxes shall have the interiors cleaned of all foreign matter before installation.

32.09 Pressure Test.. The Contractor shall furnish all labor, pumps, pipe connections, line plugs, adapters, caps, and all other necessary apparatus, except gauges, for performing hydrostatic pressure and leakage tests in accordance with AWWA Standard, *INSTALLATION OF DUCTILE-IRON WATER MAINS AND THEIR APPURTENANCES,* ANSI/AWWA C600,

except as otherwise specified. The City will furnish calibrated gauges for the tests and a source of water.

After distribution pipe has been laid, all new potable water systems, 2" dia. and larger, and each valved section thereof, shall be subjected to a hydrostatic pressure of at least one and one half (1-1/2) times the working pressure (100 PSI minimum) at the point of testing. All privately owned lines, 2" dia. and larger, shall be subjected to a hydrostatic pressure of at least 200 psi.

Each valved section of pipe shall be slowly filled with water, and the specified test pressure shall be applied by means of a pump connected to the pipe in a manner satisfactory to the Engineer. Valves shall not be operated in either the opening or closing direction at differential pressures above the rated pressure. When hydrants are in the test section, the pressure test shall be made against closed hydrant valves.

Before applying the specified test pressure, air shall be expelled completely from the pipe, valves, and hydrants. If permanent air vents are not located at all high points, corporation cocks shall be installed at such points so the air can be expelled as the line is filled with water. After all the air has been expelled, the corporation cocks shall be closed, and the test pressure applied. At the conclusion of the pressure test, the corporation cocks shall be removed and plugged by the Contractor.

When the specified pressure has been reached, the valve between the pump and the pipeline shall be closed, and the pump shall be disconnected and removed. The test pressure shall remain for a minimum of two (2) hours. If the pressure varies more than two pounds per square inch plus or minus (2 PSI+/-) during the duration of the test, it shall be extended for twenty-four (24) hours to satisfy those concerned that the decrease in the pressure is not due to thermal-volume changes of the water in the line. At the end of the twenty-four (24) hour period, the pressure shall be brought back up to the specified pressure and observed for two (2) hours.

During the pressure test, any exposed pipe, fittings, valves, hydrants, and joints shall be examined carefully. Any damaged or defective pipe, fittings, valves, hydrants, or joints that are discovered shall be repaired or replaced with sound material, and the test shall be repeated until it is satisfactory to the Owner.

32.10 <u>Sterilization, Flushing and Sampling of Lines</u>. All new potable water systems, 2" dia. and larger, and each valved section thereof, shall be disinfected before they are placed in service. All water mains taken out of service for inspecting, repairing, or other activity that might lead to contamination of water shall be disinfected before they are returned to service. The Contractor shall furnish all labor, pumps, pipe connections, additional line plugs, adapters, caps, and all other necessary apparatus and materials. All work shall conform to the AWWA Standard, *DISINFECTING WATER MAINS*, ANSI/AWWA C651 and subsequent revisions, except as otherwise specified.

Precautions shall be taken to protect the interiors of pipes, fittings, and valves against contamination. All materials delivered for construction shall be stored so as to minimize entrance of foreign material. All openings in the pipeline shall be closed with water tight plugs when pipe laying is stopped at the close of the day's work or for other reasons, such as rest breaks or meal periods.

Immediately prior to installing any pipe or fittings, the Contractor shall swab the interior of the pipe or fittings with a minimum 2% hypochlorite disinfecting solution.

After acceptance of the pressure and leakage test, the main shall be filled with water at a rate such that water within the main will flow at a velocity no greater than one (1) foot per second. Precautions shall be taken to assure that air pockets are eliminated. When all air has been eliminated, the main shall be flushed to remove particulates. The flushing velocity in the main shall not be less than three (3) feet per second for distribution mains and domestic services and ten (10) feet per second for fire service lines, unless the City determines that

conditions do not permit the required flow to be discharged to waste. The main isolation valve shall not be operated for flushing or re-chlorination until a downstream hydrant is opened. During such operations, the main isolation valve shall only be operated by Utility Department personnel.

After the initial flushing operation, the main shall be disinfected by chlorination. Chlorination will commence at a point not more than ten feet (10') downstream from the beginning of the new main. Water from an approved supply source, shall be made to flow at a constant and measured rate into the newly laid water main, and shall receive a dose of chlorine, fed at a constant rate such that the water will have not less than twenty five (25) mg/L free chlorine. The chlorine shall be applied to the water main by injecting a hypochlorite solution by means of a chemical-feed pump designed for feeding chlorine solutions.

Feed lines shall be of such material and strength as to safely withstand the corrosion caused by the concentrated chlorine solutions and the maximum pressures that may be created by the pumps. All connections shall be checked for tightness before the solution is applied to the main. During the application of chlorine, valves shall be positioned so the strong chlorine solution in the main being treated will not flow into water mains in active service. Chlorine application shall not cease until the entire main is filled with heavily chlorinated water.

The chlorinated water shall be retained in the main for at least twenty-four (24) hours and a maximum ninety-six (96) hours, during which time all valves and hydrants in the treated section shall be operated to ensure disinfection of the appurtenances. At the end of this retention period, the treated water in all portions of the main shall have a residual of not less than ten (10) mg/L free chlorine. After the applicable retention period, the heavily chlorinated water shall be flushed from the main until chlorine measurements show that the concentration in the water leaving the main is no higher than five-tenths (0.5) mg/L or as prevailing in the system.

The Contractor shall provide a means of disposing of the water and sterilizer so as to prevent damage to the environment during flushing operations. If there is any question that the chlorinated discharge will cause damage to the environment, then the Contractor shall supply a reducing agent to the water to be wasted to neutralize thoroughly the chlorine residual remaining in the water. Where necessary, Federal, State and local regulatory agencies shall be contacted to determine special provisions for the disposal of heavily chlorinated water.

After final flushing and before new water main is connected to the main system, two consecutive sets of acceptable samples, taken at least twenty-four (24) hours apart, shall be collected from the new main. At least one set of samples shall be collected from every 1,200 feet of the new water main, plus one set from the end of the line, and one set from each branch.

Samples shall show the absence of coliform bacteria, per Nebraska DHHS requirements, to pass. Following successful sampling and testing of the line, the Contractor shall remove all testing apparatus and plug the main at the point of injection of the disinfectant and flushing discharge.

Samples for bacteriological analysis shall be collected in sterile bottles treated with sodium thiosulfate as required by "Standard Methods for the Examination of Water and Wastewater." No hose or fire hydrant shall be used in collection of samples. Sample tubing shall be a maximum of one inch (1") dia. and devices shall be clean and disinfected with isopropyl rubbing alcohol or a 2% chlorine solution, and flushed prior to sampling. Sterilization by flame is not permitted. The Utility Department shall collect the final certification samples of record to check for complete disinfection. If the initial disinfection fails to produce satisfactory bacteriological samples, the main shall be re-chlorinated in accordance with this section until satisfactory results are obtained.

The Contractor shall have the opportunity to perform the actual chlorination using the Contractor's own personnel and equipment. The Contractor shall notify the Utility Engineering Division in writing at least 48 hours in advance of any work to disinfect the main. If the

Contractor's personnel or equipment do not demonstrate the capabilities or methodology to properly disinfect the newly installed main they shall immediately suspend all such work upon written notification from the Utility Department. The disinfection will then be performed by the City and the expense charged to the Contractor.

32.10.1 Contractor's Expense. Flushing, disinfection, testing and sampling will be repeated at the Contractor's expense until tests conducted by the Grand Island Utilities Department indicate the pipeline is certified for acceptance into the City's water system.

The rate charged by the City for each chlorination application will be $0.25 per linear feet of pipeline.

The rate charged by the City for each two-day round of certification samples will be five hundred dollars ($500.00).

The City will furnish personnel, pumps, and chemicals for the actual chlorination. All temporary discharge hoses, dewatering, piping, excavations, sample taps and corporations, other personnel or equipment, necessary for doing the work will remain the contractor's responsibility.

32.11 Tapping of Water Mains. The Contractor shall furnish the necessary excavation, shoring, tapping valve, tapping sleeve, dewatering, and/or specials, and do all work necessary to make the connection to the water main without interruption of service on the tapped line. The actual tapping of the main will be performed by City personnel and the expense charged to the Contractor unless otherwise noted on the plans.

32.12 Separation from Sanitary Sewer / Storm Sewer Lines (Sewers) / Other Utility Lines.

There shall be a minimum of eighteen (18) inches vertical clearance between water lines crossing either above or below sewers. Distances shall be measured from outside of water line to outside of sewer lines Variance requests to this rule must be in compliance with Nebraska DHHS guidance document entitled "Design and Installation Guide for Water Main and Sanitary/Storm Sewer Separations" and City of Grand island Standard Plan 138.

For situations where water lines are parallel to sewer lines, water lines shall be installed at least ten (10) feet horizontally from any existing or proposed sewer line. Distances shall be measured from outside of water line to outside of sewer facilities. Variance requests to this rule must be in compliance with Nebraska DHHS guidance document entitled "Design and Installation Guide for Water Main and Sanitary/Storm Sewer Separations"

For situations where water lines are parallel to other utility lines, water lines shall be installed at least three (3) feet horizontally from any existing or proposed utility line. Distances shall be measured from the outside of the water line to outside of other utility line.

32.12.1 Separation from Storm Water Drain-Ways. Water lines crossing open storm water drain-ways or other surface water crossings shall be adequately supported and anchored; and accessible for repair or replacement. Pipe shall be of special construction, having flexible, restrained, watertight joints.

The water main shall be installed with sufficient earth cover to protect the line from damage due to: freezing; flow characteristics within the channel; depth of scour from flooding; and future channel widening and deepening.

When crossing waterways in excess of fifteen (15) feet in width, valves shall be provided at both ends of the crossing so that the section can be isolated for testing or repair. The valves shall be easily accessible and located so as to not be subject to flooding.

32.12.2 Separation from Inlets

Any inlet with less than four (4) feet of horizontal clearance and/or less than eighteen (18) inches of vertical clearance from a water line shall have the following waterproofing measures:

1) All construction Joints, between the inlet base and sidewall, must have a Tremco Superstop Waterstop, or an approved equal, installed per manufacturer recommendations
2) Inlet interior must be coated with a Krystol T1 & T2 Waterproofing System, or an approved equal, installed per manufacturer recommendations.

32.13 Backfilling. Trenches shall not be backfilled until all required tests are performed, location has been documented by the Utilities Dept. and until the water system installed conforms to the requirements of the plans and specifications.

Materials for tamped backfill and the method of placement shall be as specified per ANSI/AWWA C600 Type 2 pipe bedding. The trenches shall then be carefully backfilled up to one foot above the top of the pipe with sand or fine earth, in layers of not more than six (6) inches thick and carefully tamped to form a solid bedding for the pipe.

The balance of the excavated material shall be consolidated in the following manner. Tamped backfill will be required for the full depth of the trench above the pipe bedding in layers not to exceed twelve (12) inches in depth. As backfilling proceeds, the entire mass shall be vibrated with a mechanical vibrator, provided, however, in all locations where plastic soils are encountered, the backfill material shall not be placed until the moisture content is low enough to obtain maximum density when tamped into place with mechanical tampers.

32.13.1 Compaction Testing. When standard backfill methods are used, density tests will be required for each twelve (12) inch vertical lift of compacted material placed at a frequency of not greater than three hundred (300) lineal feet of trench. Density testing shall be required on each trench crossing a public right-of-way or easement. Test locations, to verify trench backfill integrity and methodology, may be specified by the City as required. The Contractor shall maintain the trench backfill for one (1) year from the date of acceptance of the project by the City.

The Contractor shall be required to hire an independent soil testing laboratory to test separately each lift for density and certify that each and every lift was compacted to 95% of maximum density within the public right-of-way and to 90% of maximum density within public easements. Density test results shall be submitted to the City before acceptance of the project by the City.

32.14 Backfilling Under Pavement. All soil backfill under existing sidewalks, curb, gutter, paved street, must be compacted to 95% of maximum density.

32.15 Nonshrinkable Backfill. All excavations where a sidewalk, curb, gutter, or paved street has been cut or where new paving (concrete or asphalt) will be placed, may be backfilled, using non-shrinkable backfill, at the discretion of the City. The backfill shall be filled to the subgrade of the undisturbed sidewalk, curb, gutter, paving, or earth surface.There should also be a 1' buffer of soil, compacted to 95% of maximum density, between the pipe and non shrinkable backfill.

The non-shrinkable backfill shall be a mixture of sand, gravel, Portland cement, flyash and water (Per the State of Nebraska Department of Roads Standard Specifications for Highway Construction, Section 1003.02) which flows easily around the utility being covered and develops a 28-day compressive strength of from 85 to 175 psi. No non-shrinkable backfill mix designs shall be used without the approval of the Public Works Director.

The mix design shall meet the following requirements:

Portland Cement	50 lb/cy

47-B Sand - Gravel	2,700 lb/cy
Water	420 lb/cy
Air	10%
Fly Ash	200 lb/cy

32.16 Acceptance. Upon completion of a job, all debris and surplus material shall be removed from the job by the Contractor. The Engineer shall be notified so that an inspection of the work can be made.

32.17 Water Services. Water services shall be installed as indicated on the construction plans. The City Water Department will tap the water main and install the corporation stop. The Contractor shall furnish the corporation stop, dewater the trench, and pay the City Water Department for making the tap unless otherwise noted on the plans. Service lines shall be buried a minimum of five (5) feet in depth from future finished grade. No splices, joints, or unions in copper water service lines will be allowed between the water main and the curb stop if the total service length is less than 100 L.F. The service shall extend perpendicularly (90°) from the main's horizontal alignment to the curb stop or service valve location.

All water facilities shall be filled, pressure tested, disinfected, flushed, and acceptable water sample test results obtained, prior to being placed in service.

Following installation of water service lines, the Contractor shall furnish and install a seven (7) foot long, steel studded "T" post, adjacent to each stop box to identify its location. Posts shall be new, painted dark blue in color, and set three (3) feet into the ground. All marking posts shall be incidental to the service line and not a claim for extra material or work.

All work shall be per AWWA standard, *UNDERGROUND SERVICE LINE VALVES AND FITTINGS,* ANSI/AWWA C800 and subsequent revisions, City specifications, and Standard Plan 152.

32.17.1 Service Ownership. Water is conveyed from mains owned by the City of Grand Island to the consumer's premises by service lines and their appurtenances. The service line, pipes, valves, fittings and appurtenances, including the meter, through which a consumer receives water shall be owned by, installed, and maintained at the expense of the consumer.

The dividing point between the City Of Grand Island owned mains and consumer owned service line shall be defined as the connection on the discharge side of the City Of Grand Island owned main. At the dividing point, water irrevocably leaves the public system and enters privately owned facilities to serve the consumer premises.

The maintenance and protection of privately owned piping, service pipes, fittings, meters, fixtures, and water using appliances, is the exclusive responsibility and expense of the consumer; including but not limited to, protection of water using devise by reason of temporary or permanent pressure changes; the stoppage of the flow of water; limited or sustained water pressure; or from dirt or debris that may enter the service connection.

32.18 Water Meter Installations. Meters shall be installed in a clean pipeline, free from foreign materials. The meter shall be installed horizontally with the register facing upward; with the direction of flow as indicated by the arrow cast in the meter case; and protected from freezing, damage, and tampering.

Meters shall be equipped with a strainer, and shall be installed with a minimum of five (5) pipe diameters of straight run of pipe or equivalent full open components, upstream of the meter-strainer inlet flange; two and one-half (2.5) pipe diameters of straight run of pipe or equivalent full open components, downstream of the meter outlet flange. Full open components may consist of: straight pipe, full open gate valves and ball valves, tees, and concentric reducers.

No elbows, bends, non-concentric reducers, check valves, butterfly valves, back flow preventers and/or pressure reducing devices shall be installed within five (5) pipe diameters upstream or four (4) pipe diameters downstream of the meter set.

Full port ball valves or gate valves may be installed immediately upstream of the meter set, provided they are fully opened and not used to throttle flow rates through the meter.

All meters shall be equipped and installed with a remote meter reading system, to enable obtaining register reading without directly accessing the meter's location. The system shall be suitable for indoor and/or outdoor use and shall be factory sealed to prevent tampering.

32.18.1 Meter Ownership. A water meter is a device used to measure and record a consumer's water utilization. All water meters shall be purchased from the City of Grand Island; and owned by, installed, and maintained at the expense of the consumer.

32.18.2 Meter Pits and Vaults Prohibited. The water meter shall be located so that it may be easily examined and read by any such person designated by the Utilities Director to perform such functions.

Water meters shall not be located in any pit, manhole, or vault, nor an area containing fumes that are toxic, poisonous or corrosive; nor in any area in which the meter could be damaged by freezing, vibration, physical impact or structural stress; nor knowingly be allowed to conduct excessively high velocity waters.

32.19 Fire Hydrant. All fire hydrants shall be set so that the manufacturer's "bury line" mark on the barrel of the hydrant is at the final grade for the project. The traffic flange and bolts shall not be below grade. The Contractor shall furnish and install all fittings, offsets, and blocking required to adjust the hydrant's elevation. Hydrant extensions shall be supplied by the Contractor and installed by the City Water Department at the Contractor's expense. Hydrant extensions shall be no longer than 12". The method of adjustment shall have prior approval of the Utilities Department.

Service lines shall not be allowed to extend from the hydrant lead. The hydrant lead shall be defined as all piping downstream from the water main fitting supplying the hydrant.

32.20 Relocation of Mains and Service Lines. When proper management, operation or maintenance of the Water System requires; or when new construction or reconstruction projects require existing water mains, lines or services to be moved, lowered, or relocated, the City Of Grand Island shall have the right to make such changes as required. All water lines that are relocated or reconstructed shall be inspected by the Grand Island Utilities Department.

32.20.1 Pressure and Testing of Relocated Mains and Service Lines. After each section of the water piping system has been relocated, and prior to being placed back in normal operation, it shall be subjected to a hydrostatic pressure test. All distribution mains will be tested at 100 PSI (minimum) and all service lines will be tested at 200 PSI(minimum at the point of relocation. This will include testing the entire section of piping isolated and taken out of service to allow the relocation work.

32.20.2 Sterilization, Flushing and Sampling of Relocated Mains & Service Lines. All sections of the water system taken out of service for relocation, or any other activities that might lead to contamination of water, shall be disinfected before being returned to service. The Contractor shall provide a temporary connection for disinfecting the newly relocated lines. Additionally, the Contractor shall provide a temporary means for flushing the isolated sections. The discharge connection shall be sized for flushing velocities not less than three (3) feet per

second, and shall include: valves, connecting piping, and hoses as required to discharge to waste.

After final flushing and before new water main is connected to the main system, two consecutive sets of acceptable samples, taken at least twenty-four (24) hours apart, shall be collected from the new main. At least one set of samples shall be collected from every 1,200 feet of the new water main, plus one set from the end of the line, and one set from each branch. Samples shall show the absence of coliform bacteria, per Nebraska DHHS requirements, to pass.

Following successful sampling and testing of the line, the Contractor shall remove all testing apparatus and plug the main at the point of injection of the disinfectant and flushing discharge.

The City will furnish personnel, pumps, chemicals, and perform the actual chlorination of the water lines taken out of service during the repair / relocation work. The City's rate for each chlorination application will be $0.25 per linear feet of pipeline. The rate charged by the City for each set of certification samples will be five hundred dollars ($500.00). All temporary discharge hoses, dewatering, piping, excavations, sample taps and corporations, other personnel or equipment, necessary for doing the work will remain the Contractor's responsibility.

32.20.3 Water Services on Relocated Mains. All materials necessary to relocate water service lines shall be new and un-used. Copper service pipe, laid between the water main and the curb stop, shall be built of continuous construction without joints, unions, or splices.

When required to relocate service lines under undisturbed hard surfaced roadways or driveways, trenchless methods shall be used. Any standard method of trenchless pipe installation that provides the best overall system, while providing the least disruption to the area, shall be considered for approval by the City. All service pipes shall have no less than five feet of earth cover, and in all cases shall be so protected as to prevent rupture by freezing.

The new service shall normally extend perpendicularly (90°) from the main's horizontal alignment; and connected to the existing water service at the new curb stop or valve location. All work shall be done under the direction of a licensed plumber, including the abandonment of the existing service. The Contractor shall salvage the existing curb stop (or valve) and box for the City.

32.20.4 Abandonment of Service Pipes on Relocated Mains. Water services shall be abandoned by a licensed plumber. For lead service lines, cut and crimp the line. For copper service lines, cut and sweat a cap onto the pipe. All work shall be done as close as possible to, but not to exceed one foot from the tap. The City Utilities Department shall be notified whenever a service pipe is abandoned and shall inspect and approve all work done in connection with such abandonment.

SECTION 33 – METHOD OF MEASUREMENT AND BASIS OF PAYMENT

33.01 Water Main. Water mains shall be measured for payment by measuring the length down the centerline of construction of all pipelines installed, with no deduction for fittings or valves. Payment shall be made at the contract unit price per lineal foot for various sizes, including fittings, excavation, and backfill complete in place.

It is intended that all water main pipe fittings, service lines, and appurtenances shall have five (5) feet of earth cover, or as otherwise indicated on the plans and specifications. The elevation of the piping may vary depending upon existing obstructions and proposed improvements encountered during the construction. Any deviations in alignment or grade shall have the prior approval of the Utilities Department. Where additional depth is required to clear

encountered or proposed grade interference, the additional excavation and backfill shall be incidental to the project and not a claim for extra work.

33.02 Valves and Boxes. Valves and valve boxes shall be paid for at the contract unit price complete in place.

33.03 Hydrants. Fire hydrant assemblies should be itemized and bid out as individual components. .

33.04 Manholes. Manholes shall be paid for at the contract unit price bid per manhole, for a depth of five (5) feet, which payment shall include footings, ring and cover. Additional payment shall be made for manholes more than five (5) feet in depth, measuring from top of footings to top of cover, at the contract price for each vertical foot or fraction thereof in excess of five (5) feet.

33.05 Fittings. Fittings such as tees, bends, and reducers shall be paid for at the contract unit price complete in place.

33.06 Concrete Blocking. Payment will be made as one unit for each thrust block built at the contract unit price.

33.07 Corporation Stop. Corporation stops shall be paid for at the contract unit price complete in place.

33.08 Curb Stop. Curb stops shall be paid for at the contract unit price complete in place.

33.09 Water Services. Water services shall be measured for payment by measuring the length down the center of the pipeline from the corporation stop to the curb stop. Payment shall be made at the contract unit price per lineal foot for various sizes. All excavation and backfill shall be considered subsidiary.

SECTION 34 – POLYETHYLENE ENCASEMENT

34.01 Scope of Work. This section includes the Contractor furnishing materials and installation procedures for polyethylene encasement to be applied to all underground installations of ductile-iron pipe, fittings, valves, and other appurtenances to ductile-iron pipe systems. In general, all materials and installation shall conform to the AWWA Standard, *POLYETHYLENE ENCASEMENT FOR DUCTILE-IRON PIPE SYSTEMS,* ANSI/AWWA C105/A21.5 and subsequent revisions, and as additionally specified herein.

34.01.1 Soil Testing. The Contractor shall furnish materials and shall field apply polyethylene encasement to all ductile-iron pipe, fittings, valves, and other appurtenances associated with the piping system unless such corrosion protection measures shall not be required as determined by soil testing previously conducted by the City of Grand Island.

In areas where the Utilities Department has not yet made a determination on soil characteristics, the Contractor shall have the opportunity to have performed soil tests to determine if polyethylene pipe encasement should be used. If this option is selected, the Contractor shall hire an independent testing laboratory to evaluate conditions that may affect their corrosive rate on ductile-iron pipe. Analysis shall only be conducted by personnel who are

experienced in environmental factors which may contribute to the corrosion of the proposed piping system. Such test shall be at the Contractor's expense and not a claim for extra work.

All sampling collection, analysis, and evaluation shall fully comply and conform to the AWWA Standard, *POLYETHYLENE ENCASEMENT FOR DUCTILE-IRON PIPE SYSTEMS*, ANSI/AWWA C105/A21.5; APPENDIX A – "Notes on Procedures for Soil Survey Tests and Observations and Their Interpretation to Determine Whether Polyethylene Encasement Should Be Used", and subsequent revisions.

The Contractor shall deliver to the Utilities Director certified copies of such soil test results at least 48 hours in advance of any work on the installation of the water main. The Utilities Department shall review and make a determination from the data submitted.

34.02 Materials. Film shall be high-density, cross-laminated polyethylene or linear low-density polyethylene film manufactured of virgin polyethylene material. Film shall meet all the listed requirements for polyethylene film specified in the AWWA Standard, *POLYETHYLENE ENCASEMENT FOR DUCTILE-IRON PIPE SYSTEMS*, ANSI/AWWA C105/A21.5.

The polyethylene film shall have a nominal thickness of 0.008 in. (8 mil). Tube size or sheet width for each pipe diameter shall be as listed on Standard Plan No. 155.

34.03 Installation. The polyethylene encasement shall prevent contact between the pipe and the surrounding backfill and bedding material, but is not intended to be a completely airtight or watertight enclosure. All lumps of clay, mud, cinders, etc. on the pipe surface shall be removed prior to installation of the polyethylene encasement. During the installation, care shall be exercised to prevent soil or embedment material from becoming trapped between the pipe and the polyethylene.

The polyethylene film shall be fitted to the contour of the pipe to affect a snug, but not tight, encasement with minimum space between the polyethylene and the pipe.
Sufficient slack shall be provided in contouring to prevent stretching the polyethylene where it bridges irregular surfaces, such as bell-spigot interfaces, bolted joints, or fittings, and to prevent damage to the polyethylene due to backfilling operations. Overlaps and ends shall be secured with adhesive tape or other material capable of holding the polyethylene encasement in place until backfilling operations are complete.

For installations below the water table, both ends of the polyethylene tube shall be sealed as thoroughly as possible with adhesive tape at the joint overlap. This standard includes three methods of installation of polyethylene encasement on pipe. Methods A and B are for use with polyethylene tubes and Method C is for use with polyethylene sheets.

34.03.1 Method A. (Refer to Standard Plan No. 155) Cut polyethylene tube to a length approximately two (2) ft. longer than the pipe section. Slip the tube around the pipe, centering it to provide a one (1) ft. overlap on each adjacent pipe section, and bunching it accordion-fashion lengthwise until it clears the pipe ends.

Lower the pipe into the trench and make up the pipe joint with the preceding section of pipe. A shallow bell hole must be made at joints to facilitate installation of the polyethylene tube.

After assembling the pipe joint, make the overlap of the polyethylene tube. Pull the bunched polyethylene from the preceding length of pipe, slip it over the end of the new length of pipe, and secure it in place. Take up the slack width at the top of the pipe to make a snug, but not tight, fit along the barrel of the pipe, securing the fold at quarter points.

Any cuts, tears, punctures, or other damage to the polyethylene shall be repaired. Proceed with installation of the next section of pipe in the same manner.

34.03.2 Method B. (Refer to Standard Plan No. 155) Cut polyethylene tube to a length approximately one (1) ft. shorter than that of the pipe section. Slip the tube around the pipe, centering it to provide 6" in. of bare pipe at each end. Take up the slack width at the top of the pipe to make a snug, but not tight, fit along the barrel of the pipe, securing the fold at quarter points.

Before making up a joint, slip a 4-ft length of polyethylene tube over the end of the preceding pipe section, bunching it accordion-fashion lengthwise. After completing the joint, pull the 4-ft length of polyethylene over the joint, overlapping the polyethylene previously installed on each adjacent section of pipe by at least one (1) ft., make each end snug and secure.

Any cuts, tears, punctures, or other damage to the polyethylene shall be repaired. Proceed with installation of the next section of pipe in the same manner.

34.03.3 Method C. (Refer to Standard Plan No. 155) Cut polyethylene sheet to a length approximately two (2) ft. longer than that of the pipe section. Center the cut length to provide a one (1) ft. overlap on each adjacent pipe section, bunching it until it clears the pipe ends. Wrap the polyethylene around the pipe so that it circumferentially overlaps the top quadrant of the pipe. Secure the cut edge of polyethylene sheet at intervals of approximately 3 ft.

Lower the wrapped pipe into the trench and make up the pipe joint with the preceding section of pipe. A shallow bell hole must be made at joints to facilitate installation of the polyethylene. After completing the joint, make the overlap and secure the ends.

Any cuts, tears, punctures, or other damage to the polyethylene shall be repaired. Proceed with installation of the next section of pipe in the same manner.

34.03.4 Appurtenances. Cover bends, reducers, offsets, and other pipe-shaped appurtenances with polyethylene in the same manner as the pipe. When it is not practical to wrap valves, tees, crosses, and other odd-shaped pieces in a tube, wrap with a flat sheet or split length of polyethylene tube by passing the sheet under the appurtenance and bringing it up around the body. Make seams by bringing the edges together, folding over twice, and taping down. Tape polyethylene securely in place at valve stem and other penetrations.

34.03.5 Repairs. Repair all cuts, tears, punctures, or damage to polyethylene with adhesive tape or with a short length of polyethylene sheet or a tube cut open, wrapped around the pipe to cover the damaged area, and secured in place.

34.03.6 Openings in Encasement. Provide openings for branches, service taps, blowoffs, air valves, and similar appurtenances by making an X-shaped cut in the polyethylene and temporarily folding back the film. After the appurtenance is installed, tape the slack securely to the appurtenance and repair the cut, as well as any other damaged areas in the polyethylene, with tape. Service taps may also be made directly through the polyethylene, with any resulting damaged areas being repaired as described above.

34.03.7 Junctions between Wrapped and Unwrapped Pipe. Where polyethylene wrapped pipe joins an adjacent pipe that is not wrapped, extend the polyethylene wrap to cover the adjacent pipe for a distance of at least 3 ft. Secure the end with circumferential turns of tape.

Service lines of dissimilar metals shall be wrapped with polyethylene or a suitable dielectric tape for a minimum clear distance of 3 ft. away from the ductile-iron pipe.

34.03.8 Backfill for Polyethylene-Wrapped Pipe. Use the same backfill material as that specified for pipe without polyethylene wrap, exercising care to prevent damage to the polyethylene wrapping when placing backfill. Backfill material shall be free from cinders, refuse, boulders, rocks, stones, or other material that could damage polyethylene. In general,

backfilling practice should be in accordance with the AWWA Standard, *INSTALLATION OF DUCTILE-IRON WATER MAINS AND THEIR APPURTENANCES,* ANSI/AWWA C600, subsequent revisions, and City of Grand Island Specification Division VI, Water Mains, Section 32.13, 32.14 and 32.15, and as specified with the contract.

SECTION 35 – UNDERCROSSING

35.01 Scope of Work. This section includes the Contractor furnishing all the materials and installing complete the casing and carrier pipes. This work shall include, but is not limited to, dewatering, shoring, excavating, tunneling, jacking casing, placing casing with specified support, sealing, compacting, backfilling, and fine grading.

35.02 Casing Material. The steel casing pipe shall have a minimum wall thickness of in accordance with Standard Plan 141-A, coated inside and outside with asphalt coating double full dipped. The casing for the under crossing shall be entirely of one (1) material.

The design of such pipe is based upon the superimposed loads and not upon the loads which may be placed upon the pipe as a result of the jacking operations. Increases in pipe strength to withstand jacking loads shall be the responsibility of the Contractor.

Sections of the steel pipe casing shall be joined with a continuous full penetration butt weld for the full circumference. Joints shall be beveled before welding. No other methods shall be acceptable unless prior approval is obtained from the City. Welds shall be in full compliance with AWS D1.1-80 standards.

35.03 Procedure for Notifying Railroad/Public Entities. Unless otherwise noted on the plans, notification of work commencement must be sent to the entities noted below as indicated:

Railroad – 10 days prior to occupying or working within 25 feet of tracks and at completion of work. All aspects of the latest version of AREMA (American Railway Engineering and Maintenance-of-Way Association) must also be adhered to.

NDOT/Hall County – 48 days prior to occupying or working in Right-of-Way and also at completion of work.

G.I. Public Works Dept. – 72 hours prior to occupying or working in the Right-of-Way

35.04 Protection of Public. During the period that any work is being performed within the public right-of-way, or that an open trench or pit exists within the limits of said right-of-way, the Contractor shall furnish and utilize such signs, lights, barricades, and other devices to the extent necessary, in order to properly guide and protect the public; and shall be in accordance with State of Nebraska Department of Roads guidelines.

The Contractor shall accept full responsibility to the public, and to the right-of-way itself, for loss or damage caused by or directly traceable to his operations, actions, or inactions on or near the right-of-way.

35.05 Installation of Casing Pipe. The casing shall be so constructed and installed as to prevent leakage of any substance from the casing through its length, except at the ends. Casing shall be so installed as to prevent the formation of a waterway under the railroad or roadway, with an even bearing throughout its length, and shall slope to one (1) end. The casing shall be placed at the location and elevation shown on the drawing. No change in elevation from that shown shall be permitted without written approval from the City. Excavation shall be held to the minimum possible required for installation of liner plate. The casing shall be installed, using structural steel, plates, field bolted, to provide full round casing pipe. In advancing the casing operation, shielding or poling

shall be used, together with such other measures as may become advisable to prevent settlement of the overburden. Casing pipe shall extend the entire distance, between the limits indicated on the plans. Liner plates may extend further than this minimum requirement at no additional cost to the City, if the Contractor so elects.

After installation, the entire length of the casing shall be pressure grouted between the exterior of the tunnel liner and the adjacent soil, using a cement-sand grout of one (1) part cement to six (6) parts sand.

The casing pipe jacked into place shall be accomplished without disturbance of the road surface above. The pipe shall be jacked in the up-slope direction.

After installation of casing, and prior to backfilling any excavations, both ends of the casing shall be closed by a manner approved by the City, so as to prevent any infiltration of dirt, water, or refuse into the casing, prior to the future installation of the carrier pipe.

35.06 Excavation. The Contractor shall perform all excavations necessary for installation of the casing. The City shall have the right to limit the amount of trench that may be opened in advance of the line of work. All excavated materials not required for backfill shall be removed from the project by the Contractor. Banks of trenches shall be kept as nearly vertical as practical and, where required, shall be properly sheeted and braced. Trenches shall be held to the minimum width needed to provide working space for proper installation.

All grading in the vicinity of trench excavation shall be controlled to prevent surface water from flowing into the trench. Any water accumulating in the trench shall be removed by pumping or other approved method. Material excavated from the trenches shall be stacked in an orderly manner, a sufficient distance back from edge of trenches to avoid overloading and preventing slides or cave-ins. Materials unsuitable for backfilling shall be wasted by the Contractor as directed by the City.

35.07 Backfilling. After installation of the casing, all excavations and trenches shall then be carefully backfilled as per Division VI, Water Mains Specifications, Sections 32.13, 32.14, 32.15, and other Divisions as appropriate.

35.08 Carrier Pipe. Carrier pipe shall be ductile-iron pipe with restrained joints conforming to Section 37.02.1, Division VI of the City of Grand Island Standard Specifications.

35.08.1 Carrier Pipe – Casing Spacers. Carrier pipes shall be centered within the casing by using full circle designed spacers. Spacers shall be constructed of 14 gauge, T-304 stainless steel, with a ribbed PVC extrusion insulating liner that overlaps the edges of the band and prevents slippage. Spacers, for carrier pipe diameters of 16 inches or less, shall have a minimum body width of 8 inches, and for carrier pipes, 18 inches and above, the spacer band width shall be increased to 12 inches.

Spacers risers and runners shall be properly designed to position and support the carrier pipe within the casing. Risers shall be a minimum of 10 gauge, T-304 stainless steel, MIG welded to the stainless steel body. Runners shall be ultra-high molecular weight polymer (UHMW) with a high resistance to abrasion and frictional slid wear. The runners shall be mechanically attached to the riser and the bolt heads shall be welded for strength.

Casing spacers, for pipe diameters up to 16 inches, shall have two runners on the top and two runners on the bottom. For pipe diameters 18 inches through 36 inches, spacers shall be supplied with 4 runners on the bottom and two on the top.

35.08.2 Carrier Pipe – Installation. Casing spacers shall be installed on the carrier pipe within one foot from each end of the casing pipe. For carrier pipe diameters of 16 inches or less, three

spacers per length of pipe shall be installed. For carrier pipes 18 inches and above, four spacers per length of pipe shall be used.

Pipelines shall normally be installed in the center of straight casings. Risers and runners shall be dimensioned to provide a clearance of ¾ inch to the top of the casing. Refer to Standard Plan 141-A for minimum clearances between pipe bells and casing. Carrier pipes shall be pulled not pushed through the casing.

35.08.3 Carrier Pipe – Casing End Seals. After installation of the carrier pipe, the ends of the casing shall be closed against the carrier pipe to provide a backfill barrier to debris and seepage. End seals shall be made of heavy-duty neoprene or other synthetic rubber. Each end of the seal shall be secured to the pipe with T-304 stainless steel bands.

SECTION 36 – DEWATERING

36.01 General. The Contractor is responsible for devising and operating a construction dewatering system if required to install any part of the water main.

36.02 Discharge Permit. When required, facilities shall apply for authorization to discharge under a permit in compliance with the National Pollution Discharge Elimination System (NPDES).

The Owner or Operator shall use the Notice of Intent (DW-NOI) procedures to notify the Nebraska Department of Environmental Quality (NDEQ) that as a Permittee, they intend to meet all conditions of the permit. Complete and accurate information shall be submitted to the NDEQ for permission to discharge ten (10) calendar days prior to dewatering to use the construction-dewatering permit.

Nebraska Department of Environmental Quality
Wastewater Section
1200 'N' Street, Suite 400, The Atrium
PO Box 98922
Lincoln, NE 68509-8922
Tel (402) 471-4220
Fax (402) 471-2909

36.03 Dewatering Wells. If dewatering wells are used, the Contractor is required to secure all permits, properly install, and abandon the wells as per Nebraska State Statute.

SECTION 37 -- TRENCHLESS INSTALLATION OF WATER MAIN

37.01 General. Trenchless methods for the installation of pipelines requires using specialized tools, equipment and experience. The Contractor shall be well practiced with such techniques, with a minimum of five years' experience in successfully completed projects of similar size, length, and soil conditions. When required, the Contractor shall furnish the Utilities Department with a list of such jobs with the name of the purchaser, location, date, size, type, and operating conditions.

The Contractor shall provide all labor, materials, equipment, tools, dewatering, shoring, excavating, tunneling, boring with specified support, sealing, compacting, backfilling, clean-up, fine grading, and restoration of all required surface access pits,

and launching and receiving pits. Additionally, it includes transporting and setting up all equipment used to perform the operations.

All work shall comply with the Ductile Iron Pipe Research Association's guidelines for "Horizontal Directional Drilling With Ductile Iron Pipe," the pipe manufacturer's recommendations, and other specifications referenced within these contract documents.

The Utilities Department reserves the right to modify sections and location of pipe installed by trenchless methods due to such factors as: soil conditions, material limitations, installation methodology, obstacles, or other causes.

37.01.1 Permits. The Utilities Department shall obtain ingress and egress permits, right-of-way, and easements required for the work, where required. Other permits required for the performance of the work shall be obtained by the Contractor.

37.01.2 Site Investigation. The Contractor shall determine the types and locations of surface and subsurface utilities and materials, soil types, groundwater, and other environmental factors and shall determine their effect on the bore installation.

All site investigations required shall be the responsibility of the Contractor. If utilities of unknown depth or other obstructions will require grade or alignment deviations from the plans, the grade or alignment may be adjusted with the prior approval of the Utilities Department.

37.02 MATERIALS

37.02.1 Restrained Joint Pipe. Pipe shall be ductile iron with restrained push-on joints conforming to the AWWA Standard, *DUCTILE-IRON PIPE, CENTRIFUGALLY CAST,* ANSI/AWWA C151/A21.51 and Section 31, Division VI of the City of Grand Island Standard Specifications.

Pipe shall be cement mortar lined conforming to the AWWA Standard, *CEMENT-MORTAR LINING FOR DUCTILE-IRON PIPE AND FITTINGS*, ANSI/AWWA C104/A21.4 and subsequent revisions. All cement mortar lining shall be coated with asphaltic seal coat in conformity with referenced standard specifications.

Pipe shall be designed for a working pressure of 350 psi, with boltless, restrained, flexible joints, that have smoothly contoured bells. Joint designs that restrict smooth installation, increase pulling forces, or degrade the flow of drilling fluid around the joint shall not be used. Pipe and joint seals shall be capable of handling the internal pressures, external pressures, torque, and vacuum that can occur during pull-back along the bore path.

37.02.2 Pulling Heads. The pipe pulling head shall have the same characteristics as the pipe to which it is attached. Pulling heads, reamers, and swivel assemblies shall be designed and furnished by the pipe manufacturer, or an approved equal in full compliance with the pipe manufacturer's requirements.

37.02.3 Polyethylene Encasement. All pipe shall have polyethylene encasement, as per Grand Island Standard Specifications, Section 34, and as additionally specified herein.

Use only tube-type polyethylene sleeves with a nominal thickness of 0.008 in. (8 mil). Installation shall be per AWWA Standard, ANSI/AWWA C105/A21.5 "Alternate Method 'A' or Wet Trench Conditions" as modified herein. Polyethylene tubing shall be secured to the first length of pipe with several wraps of tape directly to both the pipe barrel and tubing, approximately one foot from the spigot end. Ensure that all excess material is neatly folded longitudinally, and secured around the barrel section by circumferential tape wraps at a maximum of two foot spacing. The polyethylene tubing should always overlap back over the bell and joint section to ensure that drilling fluid is not forced under the polyethylene during pull-

back. Secure the polyethylene at the joint area with circumferential tape wraps on each side of the joint. Continue installation opposite to the direction of pull-back.

37.03 PIPE INSTALLATION

37.03.1 Drilling System. The Contractor shall have the equipment and expertise appropriate for horizontal direction drilling operations and pipeline installation.

The equipment shall consist, as a minimum of a system capable of performing the bore and pulling back the pipe, with a boring mixture delivery and fluid recovery system of sufficient appropriate capacity, and a guidable drill head capable of carrying out the drilling and piping installation. The equipment shall be designed to withstand the pulling, pushing and rotating pressure involved to complete the work, and equipped to monitor and record the pull-back pressure during the pull-back operation. The drill head shall be steerable and shall be provided with necessary cutting surfaces and drilling fluid jets as required.

37.03.2 Guidance System. The bore shall utilize a proven guidance probe and interface to accurately determine the location of the drill head during the drilling operation. It shall be capable of tracking at the required installation depth in any soils encountered and enable the operator to adjust the drill head both horizontally and vertically.

37.03.3 Drilling Fluid System. A self-contained system of sufficient size to mix and deliver the boring fluid shall be provided. Tank capacities shall be sized to hold excess material completely by containing “mud” quantities without spillage. The entry point shall be appropriately enclosed and equipped with a sump pump to reclaim or discharge excess drilling fluids to a reuse or disposal tank. The system shall be able to ensure thorough mixing of all components of the slurry to avoid clumping. The boring fluid shall be continually agitated by the mixing system. No discharge of excess material or site runoff will be allowed.

37.03.3.1 Drilling Fluid. The drilling fluid shall be comprised of clean potable water, bentonite clay, and appropriate additives. The Contractor shall be responsible for obtaining, transporting, and/or storage of any water required for drilling fluids. Additives shall be environmentally safe, non-toxic, and approved for such usage. The boring fluid shall be of a consistency to suspend the cuttings and maintain the integrity of the bore walls.

37.03.4 Excavations. The Contractor shall be responsible for all excavations and properly maintaining trench banks, sheeting, and bracing as required. Excavations shall be of sufficient width to provide proper working space for drilling operations and down hole assemblies. Material excavated from the trenches shall be stacked in an orderly manner a sufficient distance back from edge of excavations to avoid overloading and preventing slides or cave-ins.

Excavations shall be located for proper installation of the pipeline. The insertion / assembly pits may also subsequently be used for connections, installing valves, fittings, or hydrant assemblies at locations indicated on the plans.

37.03.5 Pilot Hole. Install the pilot hole using a steerable drilling head. The pilot hole shall be drilled along the planned bore path and alignment, to the tolerances listed and concurrent with safe operations. Proper setbacks shall be maintained to avoid excessively steep entry and exit of the pilot hole. In all cases, the transition from the surface to the bore path shall be within the pipe manufacturer’s allowable joint deflection.

The Contractor has the option to pre-ream the pilot hole. However, lack of pre-reaming shall not place excessive loading on the installation of the pipeline. Any damage to the pipeline resulting from inadequate pre-reaming shall be the responsibility of the Contractor.

37.03.6 Alignment. The bore path shall be to the elevations and alignment indicated on the drawings and as staked for the contractor. The installation shall be guided by equipment that gives continuous, accurate monitoring and done without disturbing the area surfacing, ditch lines, or waterways.

The Contractor shall continuously monitor the bore alignment at all times when the bore operation is proceeding. When the alignment goes beneath a body of water, a visual inspection shall be made at the most accessible point immediately downstream of the bore alignment for changes in turbidity or color, which may indicate a subsurface breech in the boring operation.

Pipe entry and exit points may be moved further from the original plan only with prior approval of the Utilities Department. Any bore exit to the surface, other than for the final location, shall be plugged and stabilized before proceeding, and the exit site shall be restored to its original condition.

Deviations from the alignment indicated on the plans may be allowed providing:

- No deviation shall be greater than 5% of depth per 100' of installed length;
- All piping shall be installed with a minimum of five (5) feet of earth cover;
- The pipeline shall not interfere with proposed infrastructure locations, or the safe operation and maintenance of existing utilities or structures;
- The pipeline shall not encroach beyond the right-of-way, easement, or construction limits.

In cases where the pipe is outside of the specified limits, or otherwise deviates more than the approved maximum, the Contractor shall re-install the pipe to the accepted alignment and elevation at their own expense.

37.03.7 Installation – Cartridge Method. The Cartridge Assembly Method shall be the preferred option for assembling pipe sections due to right-of-way imitations.

The individual pipe sections shall be joined in the insertion pit. Each section shall then be progressively pulled into the bore path a distance equivalent to a single pipe section. The process is repeated until the entire length is pulled through the bore path to the exit point.

37.03.8 Pull-Back. After successfully reaming of the bore hole, the Contractor shall attach a swivel connector between the final reamer and the pulling head and pull the pipe through the bore hole. Once pull-back operations have commenced, the operations shall continue without interruption until the pipe is completely pulled back through the bore hole. Pipe shall only be pulled from the plain end to minimize pulling forces and to take advantage of the bell transition.

If excessive pull-back is encountered, or the pipe becomes immovable, the Contractor shall stop the pull-back operations to allow any potential hydro-lock to subside, then pulling operations will again commence. If the pipe remains stuck, the Contactor shall notify the City to discuss options or alternatives, and then work shall proceed in accordance with those decisions.

37.03.9 Pulling Force. Restrained push-on joint pipe must be capable of withstanding the pulling forces used to install the pipe though the bore hole. The pulling force shall be limited to the joints maximum dead-end thrust load at the rated working pressure, and in full compliance with the pipe manufacturer's recommendations.

37.03.10 Backfill and Clean-Up. Disposal and clean-up of excess drilling fluid and pits shall be the responsibility of the Contractor. Disposal shall not be allowed on the project site. All work shall be done in accordance with environmental regulations, right-of-way limits, and permit requirements.

The Contractor shall backfill all excavations with suitable compacted materials as required. Earth spoiled by drilling mud or where other deleterious backfill substances are encountered, the material shall be rejected, hauled away, and disposed of by the Contractor and the site refilled with clean material. The area shall be restored to a condition equal to or better than its original condition.

Materials to be removed from the job site shall be disposed of properly. If materials are to be disposed of on private property, prior written permission shall be obtained from the owner of the property, and submitted to the City's designated representative.

All materials, trash, and debris shall be removed by the Contractor from the construction limits in a timely manner.

37.04 RECORDS AND MEASUREMENTS

37.04.1 Records. The Contractor shall keep a daily log of all drilling activities and records indicating the pull-back loads exerted on the pipe for each section installed. A copy shall be provided to the City Utilities Department upon completion of the boring procedure. When monitoring records indicated the pullback forces exceed the pipe manufacturer's loading recommendations, the pipeline may be rejected.

The field records and notes shall additionally specify: the type of equipment used; the length and depth of the installation; and existing utility locations.

37.04.2 Measurement for Payment. The installation of bored pipe will be measured for payment by the linear foot of the various sizes of pipe acceptably installed. Measurement will be for full length of placement as verified in the field.

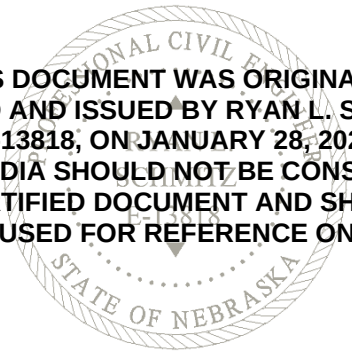

THIS DOCUMENT WAS ORIGINALLY SEALED AND ISSUED BY RYAN L. SCHMITZ E-13818, ON JANUARY 28, 2020 THIS MEDIA SHOULD NOT BE CONSIDERED A CERTIFIED DOCUMENT AND SHOULD BE USED FOR REFERENCE ONLY.

RECLOSER POLICY

CITY OF GRAND ISLAND Utilities Department

RECLOSER POLICY

FOR ANY WORK ON OR NEAR CITY OF GRAND ISLAND OVERHEAD OR UNDERGROUND POWER LINES

PURPOSE

This policy applies to anyone planning to work on or near power lines or conduits where there is a potential danger of electric shock, equipment damage, and/or injury. Examples include, but are not limited to, contractors, well drillers, crane operators, tree trimmers, and excavators. For purposes of this policy any party planning work will be referred to as "Contractor".

PROCEDURE

I. CONTACT CITY OF GRAND ISLAND ELECTRIC DEPARTMENT

Anyone wanting to do work on or near power lines shall consult the City of Grand Island Utilities Department 48 hours prior to doing any set up of equipment or actual work. (The City will not charge for this consultation.)

Contact List:	First contact	- Bryan Fiala	(308) 390-5210
	Second contact	- Randy Leiser	(308) 390-5213
	Or	- Larry Christensen	(308) 390-5212
	Third contact	- Power Dispatcher	(308) 385-5465
Emergency Contact 24/7:		- Utility Call Center	(308) 385-5461

The City representative will evaluate the site and situation, and make a determination as to the proper course of action.

II. POSSIBLE ACTIONS (TO BE DETERMINED BY THE CITY)

A. Maintain safe distance at all times. The City representative will recommend the required distance.
B. Request the recloser be put in the "off" position. Note, the lines will remain energized, but will not automatically reclose if a fault is detected. (The City will not charge to turn the recloser off and on.)
C. Cover the lines. This could be in addition to requesting the recloser off or a stand alone action. In this case a City line crew will come on site and physically cover the power lines with insulating socks, but the lines will remain energized. (The City will charge for this service.)

Information Only

D. Switch section of line out of service. City personnel will de-energize the line section. This could require up to 2 weeks advanced notice. (The City will charge for this service.)

III. RECLOSER POLICY

If "Recloser Off" is the action determined, then the following applies.

A. Prior to work.

1. During the consultation, the Contractor and the City representative will jointly fill out the "Recloser Off Request Form". Copies will be distributed as instructed on the form and repeated here.
    a. Copy A. City field representative.
    b. Copy B. Contractor on site.
    c. Copy C. Contractor main office.
    d. Copy D. City Power Dispatcher at Phelps Control Center.
2. Prior to beginning work each day, the Contractor on site will call the Phelps Control Center at (308) 385-5465 and do the following:
    a. Provide the Recloser Off Request Form number from upper right corner of form.
    b. Request recloser for appropriate feeder be turned "off".
    c. Provide an estimated completion time for that day.
3. The Power Dispatcher will do the following:
    a. Match the form number with their own.
    b. Verify the on site phone number.
    c. Verify the requested feeder matches the feeder identified on the form.
    d. Turn the recloser off.
    e. Relay to the Contractor that the recloser is turned off for that feeder.
    f. Announce over the City radio system that said recloser is off for said Contractor.

B. During work.

The recloser remains in the off position, but the line energized.

***KEY POINT** – A fault anywhere on the feeder for any reason will cause an outage and the Power Dispatcher will receive an alarm. The Power Dispatcher will immediately contact the Contractor on site to verify whether or not the Contractor work caused the fault, and that all personnel and equipment are in the clear.*

Information Only

C. After work.

1. Whenever the Contractor stops or completes work for an extended time, the onsite Contractor will call the Phelps Control Center at (308) 385-5465 and do the following:
   a. Provide the Recloser Off Request Form number.
   b. State that work is complete and all personnel and equipment are in the clear.
   c. Request recloser for the appropriate feeder be turned “on”.
2. The Power Dispatcher will do the following, while the Contractor remains on the line:
   a. Match the form number with their own.
   b. Verify the requested feeder matches the feeder identified on the form.
   c. Turn the requested recloser on.
   d. Relay to the Contractor that the recloser for that feeder is turned on.
   e. Announce over the City radio system that said recloser is on.

KEY POINT *– If the Contractor does not call when work is expected to be complete, such as at the end of a day, the Power Dispatcher will call the Contractor and verify work is complete, so the recloser does not remain off unnecessarily.*

****

Version History

Version	Date	Action	By
1	10/2/1995	New document	
1	3/23/2011	Updated personnel reference.	Tom Barnes
2	5/2/2012	Total policy update.	Jeff Mead
2	2/2/2017	Phone number updates.	Jeff Mead

END

Information Only

NPDES CONSTRUCTION DEWATERING DISCHARGE PERMIT

NEBRASKA

Good Life. Great Environment.

DEPT. OF ENVIRONMENTAL QUALITY

Pete Ricketts, Governor

AUTHORIZATION TO DISCHARGE UNDER THE NATIONAL POLLUTANT DISCHARGE ELIMINATION SYSTEM (NPDES)
General NPDES Permit Number NEG671000 2017

A General NPDES Permit Authorizing Dewatering Discharges

In compliance with the provisions of the Federal Water Pollution Control Act (33 U.S.C. Sections. 1251 et. seq. as amended to date), the Nebraska Environmental Protection Act (Neb. Rev. Stat. Sections 81-1501 et. seq. as amended to date), and the Rules and Regulations promulgated pursuant to these Acts, the Director of the Nebraska Department of Environmental Quality is hereby issuing this general permit authorizing the discharge of pollutants to waters of the State and excluding tribal lands within the State of Nebraska. This general permit establishes prohibitions, limitations and other conditions pertaining to these discharges. This general permit does not relieve permittees of other duties and responsibilities under the Nebraska Environmental Protection Act, as amended, or established by regulations promulgated pursuant thereto.

This general permit establishes prohibitions and other conditions pertaining to these types of discharges. This general permit is issued authorizing dewatering discharges from construction excavation sites and wells to waters of the state. Some dewatering discharges may be prohibited to those waters identified in Part I B and C of this permit.

This permit shall become effective on **January 1, 2017.**

This permit and the authorization to discharge shall expire at midnight, **December 31, 2021.**

Pursuant to the Delegation Memorandum dated August 22, 2016, and signed by the Director, the undersigned hereby executes this document on the behalf of the Director.

Signed this 23rd day of December, 2016

Shelley Schneider

Shelley Schneider
Water Permits Division Administrator

Jim Macy, Director
Department of Environmental Quality
P.O. Box 98922
1200 N Street, Suite 400
Lincoln, Nebraska 68509-8922
OFFICE 402-471-2186 FAX 402-471-2909
ndeq.moreinfo@nebraska.gov
deq.ne.gov

Table of Contents

PART I. ELIGIBILITY 2

A. DISCHARGES AUTHORIZED BY THIS PERMIT 2
B. AREA OF APPLICATION 2
C. LIMITATIONS OF COVERAGE 2
D. PERMIT COMPLIANCE 2

PART II. AUTHORIZATION TO DISCHARGE 2

A. AUTHORIZATION 2
B. ADDITIONAL NOTIFICATION REQUIREMENTS THAT APPLY TO SOME FACILITIES 4
C. REVOCATION OF DISCHARGE AUTHORIZATION 5
D. REQUIRING AN ALTERNATIVE PERMIT AND APPLICATION 5
E. NOTIFICATION OF CHANGES: OWNERSHIP, NAME, OR CONTACTS 5
F. NOTIFICATION OF ACTIVITIES THAT MAY ALTER THE WATER QUALITY OF THE DISCHARGE 5
G. NOTIFICATION OF PROJECT RELOCATION OR COMPLETION 5

PART III. EFFLUENT LIMITATIONS AND MONITORING REQUIREMENTS FOR DEWATERING DISCHARGES 6

A. CONSTRUCTION EXCAVATION DISCHARGE EFFLUENT LIMITATIONS AND MONITORING REQUIREMENTS 6
B. FOUNDATION SUMPS, UTILITY VAULTS OR WELL EFFLUENT LIMITATIONS AND MONITORING REQUIREMENTS 7
C. SITE SPECIFIC LIMITATIONS 7
D. ONE-TIME SAMPLING ANALYSIS FOR METALS 8
E. ONE-TIME SAMPLING ANALYSIS FOR ORGANICS 8
F. LAND APPLICATION/BENEFICIAL REUSE 8

PART IV. OTHER CONDITIONS AND REQUIREMENTS 8

A. COMPLIANCE WITH PERMIT TERMS AND CONDITIONS 8
B. DISCHARGE AFFECTING ENDANGERED OR THREATENED SPECIES 8
C. DISCHARGES AFFECTING HISTORICAL PLACES OR ARCHEOLOGICAL SITES 8
D. PROHIBITED TOXIC DISCHARGES 8
E. PROHIBITED DISCHARGES THAT CAUSE AESTHETIC VIOLATIONS 9
F. IMMEDIATE REPORTING REQUIREMENT 9
G. REDUCTION OF THE MONITORING FREQUENCY 9
H. IMPLEMENTATION OF EROSION CONTROL AND ENERGY DISSIPATION MEASURES 9
I. GROUNDWATER CONTAMINATION 9
J. MODIFICATION OF PERMIT ATTACHMENTS 9
K. ADDITIONAL MONITORING REQUIREMENTS 9
L. ELECTRONIC REPORTING 9

Appendix A-- Standard Conditions
Appendix B -- State Resource and Public Drinking Water Supply Streams
Attachment #1 -- DW-NOI Notification of Intent
Attachment #2 – Threatened and Endangered Species Checklist
Attachment #3 – DW-DMR Discharge Monitoring Report
Attachment #4 – PCE-Physical Characteristics Examination Report
Attachment #5 -- NCR Noncompliance Report
Attachment #6 -- DW-RLN Dewatering Site Relocation Notice

Part I. Eligibility

A. Discharges Authorized by this Permit

This permit authorizes ground and surface waters discharges from dewatering construction excavations, foundation sumps, utility vaults or wells provided the water being discharged is groundwater or groundwater mixed with storm water. This permit does not constitute authorization under 33 U.S.C. 1344 (Section 404 of the Clean Water Act) of any stream dredging or filling operations.

B. Area of Application

This permit has application throughout the entire State of Nebraska excluding State Resource Waters and tribal lands within the State of Nebraska.

C. Limitations of Coverage

This permit does not authorize the following discharges and may be the basis for denial or termination of authorization under this general permit. The department shall be consulted prior to your submission of the DW-NOI if any of the following conditions apply:

1. Discharges regulated by an existing NPDES permit;
2. Direct discharges to classified lakes or impounded waters listed in NDEQ Title 117, Chapter 6;
3. State Resource Waters (See Appendix B)
4. Discharges to Public Drinking Water (See Appendix B), unless written authorization from the Department is received;
5. Discharges to tribal lands within the State of Nebraska;
6. The discharges containing sanitary, process wastewater or livestock wastes;
7. Discharges in the opinion of the Department, may create potential, negative water quality impacts in the receiving stream, water body; and ground water;
8. Discharges that may adversely impact critical habitat of aquatic related, threatened or endangered species as designated by Nebraska Game and Parks Commission (www.ngpc.state.ne.us) or the U.S. Fish and Wildlife Service (www.fws.gov);
9. Discharges that may adversely affect properties listed or eligible for listing in the National Register of Historic Places (www.nebraskahistory.org) or affecting known or discovered archeological sites; and
10. Storm water discharges associated with industrial activity as defined in Title 119, which includes storm water discharges from construction sites of 1 acre or more.

D. Permit Compliance

Any noncompliance with the requirements of this Permit constitutes a violation of the provisions of the Federal Water Pollution Control Act (33 U.S.C. Secs. 1251 et. seq. as amended to date), the Nebraska Environmental Protection Act (Neb. Rev. Stat. Secs. 81-1501 et. seq. as amended to date), and the Rules and Regulations promulgated pursuant to these Acts.

Part II. Authorization to Discharge

A. Authorization

Eligible facilities are defined by the requirements and limitations in Part I. The eligible facilities may apply for authorization to discharge under this general permit using the Notice of Intent (DW-NOI) (See Attachment #1). You must use the DW-NOI form provided in Attachment #1 (or a photocopy thereof or electronic DW-NOI form that may become available during the term of this permit provided by NDEQ).

1. You must use the DW-NOI form to notify the Department that as a Permittee, you intend to meet all conditions of this permit. Complete, accurate, and timely DW-NOI forms shall automatically receive authorization ten (10) calendar days after the post-marked date. The Department shall provide a Discharge Authorization Number for the dewatering site described on the DW-NOI form.
    a. Ongoing projects authorized under the previous version of this permit shall remain in effect no longer than 180 days after the issue date of this permit. Permittees with ongoing projects shall operate under

all existing terms and conditions of that permit until the project is either terminated or receives authorization under this permit.

b. You are not prohibited from submitting NOIs after initiating Dewatering. An NOI submitted to the Department after initiating dewatering shall receive authorization consistent with this permit. Authorization of a late NOI shall not preclude the Department from taking enforcement action for discharging pollutants to Waters of the State without a permit.

c. The Department may request additional information from an applicant for any substantive reason and postpone the assignment of discharge authorization in writing as necessary.

d. Written authorization shall be required for dewatering when effluent discharge is within 2,500 feet of any water of the state identified in Appendix B of this permit.

e. Submittal of the NPDES DW-NOI form does not relieve the applicant of the responsibility to comply with the requirements of other government agencies.

f. The current addresses and telephone number at the time of permit issuance are:

Wastewater Section
Nebraska Department of Environmental Quality
1200 N Street, The Atrium, Suite 400
P.O. Box 98922
Lincoln, Nebraska 68509-8922
Telephone 402-471-4220
Web Site Address: deq.ne.gov

2. Contents of the Notice of Intent

You must provide the following information on the DW-NOI form

Site Information

The following information shall be provided:

1) The name of the site;
2) The site location in descriptive terms (i.e., street address, or if not available, in relationship to recognizable landmarks);
3) A legal description designated in terms of section, township, range and county, provided to the nearest 1/16th of a section, unless the facility occupies a larger area (e.g., NW¼, SW¼, S10, T15N, R11E, Douglas County) and/or Global Positioning System (GPS) location;
4) Information on the number of outfalls and the discharge volume anticipated from each;
5) The source of water (e.g., surface water, storm water runoff and/or ground water);
6) The identity of any contamination and/or pollutants that may be present in dewatering discharges.

Receiving Stream/Land Application Area

1) The name of the stream or water body that will receive the outfall discharges or the legal description of ground down to the nearest 40 acre parcel for land application;
2) Identify the number of outfalls that discharge into the receiving stream;
3) Identify if the receiving stream(s) is listed in Appendix B, and
4) Provide a brief description of any controls used to dissipate energy so as to prevent channel erosion and scouring in the receiving stream or drainage way.

The “Certifying Official’s” Identity, Mailing Address and Telephone Number

The "Authorized Representative’s” Identity, Mailing Address and Telephone Number

Certification Statement

The following certification statement shall be contained in the Notice of Intent:

“I certify under penalty of law, that this document and all attachments were prepared under my direction or supervision in accordance with a system designed to assure that qualified personnel properly gathered and evaluated the information submitted. Based on my inquiry of the person or persons who manage the system or those persons directly responsible for gathering the information, the information submitted is, to the best of my knowledge and belief, true, accurate and complete. I am aware that there are significant penalties for submitting false information including the possibility of fine and imprisonment for knowing violations.”

I further certify that:

1) I or qualified members of my staff, have reviewed and understand the terms and conditions of NPDES General Permit Number NEG671000;
2) The facility identified in Section 1 of this DW-NOI (Notice of Intent) meets the "Eligibility" requirements and is not excluded by the "Limitation of Coverage" requirements, set forth in Section C of the permit; and
3) I understand that the submission of this DW-NOI (Notice of Intent) obligates the facility identified in Section 1 of this Notice of Intent to comply with the terms and conditions of the Permit NEG671000, provided authorization to discharge is obtained.

Signature Requirements

The owner/operator (person, business, or governmental entity) shall sign and submit the initial Notice of Intent. DW-NOIs for additional sites may be submitted under the signature of the Authorized Representative. The owner/operator must specifically authorize the Authorized Representative to perform this task in a previous DW-NOI or other written documentation.

B. Additional Notification Requirements that Apply to Some Facilities

1. The Department may request additional information from the applicant when it is necessary to adequately review the DW-NOI and evaluate the discharge request.
2. Facilities that discharge to a public or private storm sewer system are obligated to notify the owner or operator of the storm sewer system.

C. Revocation of Discharge Authorization

1. The Director may revoke a permittee's authorization to discharge under the terms and conditions of this permit for any of the following reasons:
   a. When it becomes necessary to protect the public health and welfare.
   b. The discharge is adversely affecting a listed endangered or threatened species or its critical habitat;
   c. The discharge is causing a violation of a surface or ground water quality standard; and
   d. A permittee fails to submit an alternative permit application requested pursuant to Part II.D.
2. The Department may deny authorization to discharge under the terms and conditions of this permit by providing the applicant with a written notice of the denial and an explanation of the basis for the determination.
3. The Department may require the submittal of a different Notice of Intent for an alternative general permit. The Department shall provide an explanation of the basis for any such request.
4. All permittees must meet the requirements set forth in this permit. Failure to do so shall negate any authorization to discharge.
5. Authorization to discharge under the terms and conditions of this permit shall be terminated upon the issuance of the alternative permit or the granting of discharge authorization under another alternative general permit.

D. Requiring an Alternative Permit and Application

1. The Director may require any person authorized to discharge under the terms and conditions of this permit to apply for and obtain either a site-specific NPDES permit or an alternative NPDES general permit. The Department shall provide a written notice that an alternative permits application is required. This notice shall include:
   a. A brief explanation of the basis for the determination;
   b. An application or Notice of Intent for an alternative permit; and
   c. A deadline for submitting the application for the alternative permit.
2. The Director may grant additional time for the submittal of the alternative application following the initial notice. Conditions that may constitute a basis for requesting an alternative application include, but are not limited to:
   a. The discharge is a significant contributor of pollution;
   b. The discharge is to Public Drinking Water Supply (see Appendix B);
   c. The discharger is not in compliance with the terms and conditions of the permit;
   d. Additional pollution control or prevention technology has become available;
   e. The promulgation of new effluent limitations that apply to the source;
   f. The approval of a water quality management plan containing requirements applicable to the source;
   g. The identification of conditions or pollutant sources not previously recognized; and
   h. The issuance of an alternative general permit that applies to the discharge.

E. Notification of Changes: Ownership, Name, or Contacts

The permittee is responsible for notifying the Department within 30 days of any transfer of ownership, facility name change, or changes in the owner/operator or Authorized Representative. The former owner and the new owner must provide written notification of ownership changes.

F. Notification of Activities that may alter the Water Quality of the Discharge

The permittee shall notify the Department immediately of any activities or actions that may alter the water quality of dewatering discharges. For additional reporting requirements relative to spills, leaks, or effluent physical characteristics (Immediate Reporting Requirements) see Part IV.F.

G. Notification of Project Relocation or Completion

1. The permittee shall notify the Wastewater Section within 30 days when a different dewatering site is established. The written notification of these site changes is completed using the NPDES DW-RLN form - Relocation Notice.
2. The permittee shall notify the Department prior to initiating dewatering activities if the start-up date

varies by more than one week of the anticipated date submitted in the DW-NOI form. Written notification shall be provided to the Department.

3. The permittee shall provide the Department with a written notification of the project termination within 30 days after discontinuing the dewatering activities.

Part III. Effluent Limitations and Monitoring Requirements for Dewatering Discharges

A. Construction Excavation Discharge Effluent Limitations and Monitoring Requirements

The dewatering discharges associated with construction excavation sites shall be monitored and subject to the limitations set forth in the following table. Monitoring shall be conducted at the discharge point(s). The Department may specify an alternate or more specific monitoring point(s).

Parameter	Storet #	Units	Discharge Limitations		Monitoring Frequency (1)	Sample Type
			Monthly Average	Daily Maximum		
Flow	50050	MGD	Report	Report (2)	Daily	Calculated or Measured
Physical Characteristics (3)	NA	NA	(3)		Daily	*In Situ* and Grab (3)
Petroleum Hydrocarbons (4)	82180	mg/L	Report	10	(4)	Grab
Total Suspended Solids	00530	mg/L	Report	90	Weekly	Grab
Metals	NA	mg/L	Varies	Varies	(7)	Grab
Organics	NA	mg/L	Varies	Varies	(7)	Grab
Parameter	**Storet #**	**Units**	**Discharge Limitations**		**Monitoring Frequency**	**Sample Type**
			Minimum	**Maximum**		
pH (5)	00400	Standard Units	6.5 (6)	9.0 (2)	Weekly	Grab

Footnotes:

(1) Monitoring shall be initiated within 8 hours after the discharge is started.

(2) Maximum means the maximum amount discharged.

(3) The procedures, limits, sampling, record keeping and reporting requirements for this parameter are set forth in the 'Physical Characteristics Examination Procedures' (see Attachment #6 of this permit).

(4) If a visible hydrocarbon sheen or petroleum free-product is detected during the physical characteristic examination, the petroleum hydrocarbon reporting and limitation requirements apply. The OA-2 test method (University Hygienic Laboratory, Iowa City, IA) shall be used for Total Extractable Hydrocarbon analyses, unless otherwise specified in writing by the NDEQ.

(5) All pH samples must be analyzed within a 15-minute time period.

(6) Minimum means the minimum acceptable value. pH is reported as the negative logarithm of the hydrogen ion concentration. pH results cannot be averaged.

(7) Applicable on a site by site basis – authorization letter will list if sampling is required and frequency.

Abbreviations: MGD - million gallons per day mg/L - milligrams per Liter NA - Not Applicable

B. Foundation Sumps, Utility Vaults or Well Effluent Limitations and Monitoring Requirements

The dewatering discharges associated with foundation sumps, utility vaults or wells used to lower ground water levels shall be monitored and subject to the limitations set forth in the following table. Monitoring shall be conducted at the discharge point(s). The Department may specify an alternate or more specific monitoring point(s).

Parameter	Storet #	Units	Discharge Limitations		Monitoring Frequency (1)	Sample Type
			Monthly Average	Daily Maximum		
Flow	50050	Gallons per Day	Report	Report (2)	Daily	Calculated or Measured
Physical Characteristics (3)	NA	NA	(3)		Daily	*In Situ* and Grab (3)
Petroleum Hydrocarbons (4)	82180	mg/L	Report	10	(4)	Grab
Total Suspended Solids	00530	mg/L	Report	30	Weekly	Grab
Metals	NA	mg/L	Varies	Varies	(7)	Grab
Organics	NA	mg/L	Varies	Varies	(7)	Grab
Parameter	**Storet #**	**Units**	**Discharge Limitations**		**Monitoring Frequency**	**Sample Type**
			Minimum	**Maximum**		
pH (5)	00400	Standard Units	6.5 (6)	9.0 (2)	Weekly	Grab

Footnotes:

(1) Monitoring shall be initiated within 8 hours after the discharge is started.

(2) Maximum means the maximum amount discharged.

(3) The procedures, limits, sampling, record keeping and reporting requirements for this parameter are set forth in the 'Physical Characteristics Examination Procedures' (see Attachment #6 of this permit).

(4) If a visible hydrocarbon sheen or petroleum free-product is detected during the physical characteristic examination, the petroleum hydrocarbon reporting and limitation requirements apply. The OA-2 test method (University Hygienic Laboratory, Iowa City, IA) shall be used for Total Extractable Hydrocarbon analyses, unless otherwise specified in writing by the NDEQ.

(5) All pH samples must be analyzed within a 15-minute time period.

(6) Minimum means the minimum acceptable value. pH is reported as the negative logarithm of the hydrogen ion concentration. pH results cannot be averaged.

(7) Applicable on a site by site basis - authorization letter will list if sampling is required and frequency.

Abbreviations: MGD - million gallons per day mg/L - milligrams per Liter NA - Not Applicable

C. Site Specific Limitations

Site specific limitations for a parameter may be added on a case-by-case basis that are equivalent to the basic standards and methodologies for surface water, or regulation for effluent limitations, or any other applicable regulation, and would be specified in the certification along with the appropriate monitoring frequency.

D. One-time sampling analysis for Metals

The Department may request a one-time sampling and analysis for specific or all inclusive metals parameters on a site specific/ discharge specific basis. The permittee will be required to submit these results to the Department. The Department will then review the data to determine if any certification amendments are necessary based on the effluent monitoring results.

E. One-time sampling analysis for Organics

The Department may request a one-time sampling and analysis for specific or all inclusive organics parameters on a site specific/ discharge specific basis. The permittee will be required to submit these results to the Department. The Department will then review the data to determine if any certification amendments are necessary based on the effluent monitoring results.

F. Land Application/Beneficial Reuse

The dewatering discharges associated with this permit may be land applied or reused (i.e. dust control, etc.) as long as the following conditions are met:

1. Land application shall not be conducted when the ground is frozen or saturated;
2. Land application sites shall have a slope of 12% or less:
3. Land application shall not occur on sites where the water table is less than 4 feet from the surface;
4. The total hydraulic application rate shall not exceed 2 inches per acre (54,304 gallons) per week;
5. Land application sites shall be free of perennial or intermittent streams, ponds, lakes, or wetlands;
6. Land application will not be allowed on crops that are intended for distribution in their raw form for direct human consumption (e.g. fresh produce);
7. Land application must cease immediately if any adverse impacts to animal or plant life is discovered or if any film, foam, color or noxious odors occur, or if erosion, channelization, ponding, or surface runoff occurs.

Part IV. Other Conditions and Requirements

A. Compliance with Permit Terms and Conditions

Compliance with the terms and conditions of this permit does not relieve the permittee from any liability that may arise as a consequence of their discharges.

B. Discharge affecting Endangered or Threatened Species

This permit does not replace or satisfy any review requirements for Endangered or Threatened species from new or expanded discharges that adversely impact or contribute to adverse impacts on a listed endangered or threatened species or adversely modify a designated critical habitat. The permittee must conduct any required review and coordinate with appropriate agencies for any project with the potential of affecting threatened or endangered species, or their critical habitat.

C. Discharges Affecting Historical Places or Archeological Sites

This permit does not replace or satisfy any review requirements for Historic Places or Archeological Sites, from new or expanded discharges which adversely affect properties listed or eligible for listing in the National Register of Historic Places or affecting known or discovered Archeological Sites. The permittee must be in compliance with National Historic Preservation Act and conduct all required review and coordination related to historic preservation, including significant anthropological sites and any burial sites, with the Nebraska Historic Preservation Officer. You must comply with all applicable state, and local laws concerning the protection of historic properties and places. Your discharge authorization under this permit is contingent upon this compliance.

D. Prohibited Toxic Discharges

Discharges shall be free from toxic substances, which alone or in combination with other substances, create conditions unsuitable for aquatic life, except in instances where there is no net increase in the receiving water body of the quantity or concentration of the toxic substance. The exception shall only apply in instances where water is taken from and discharged to the same water body and no increases in pollutant quantities or concentrations occur.

E. Prohibited Discharges that Cause Aesthetic Violations

Discharges shall not contain pollutants at concentrations or levels that produce objectionable films, foam, colors, turbidity or deposits, or noxious odors in the receiving stream or waterway, except in instances where there is no net increase in pollutant quantities or concentrations in the receiving water body. The exception shall only apply in instances where water is taken from and discharged to the same water body and no increases in pollutant quantities or concentrations occur.

F. Immediate Reporting Requirement

The permittees shall report immediately by telephone upon becoming aware of any of the following:

1. Evidence indicating a possible violation of the effluent limitations and requirements listed in Effluent Limitations and Monitoring Requirements for Dewatering Discharges;
2. Evidence of oil or petroleum product contamination in the effluent (e.g., a visible oil sheen);
3. Any physical characteristic in the effluent that could indicate the presence of a pollutant or pollutants not previously identified or anticipated; and
4. The occurrence, or new knowledge of, any spills, leaks or contamination in the vicinity of the project that could impact the water quality of the effluent.

The telephone numbers are listed in Part II. A. 1. f

G. Reduction of the Monitoring Frequency

1. Excavation Dewatering

   If continuous dewatering is conducted for a period of 30 days, the permittee may request a reduction in the monitoring frequency. The request shall be submitted in writing. The compliance limitations and requirements criteria will be used to evaluate the frequency reduction.

2. Dewatering using Wells to depress the water level

   After dewatering wells have been operated continuously for a one-week period, the permittee may request a reduction in the monitoring frequency. The request shall be submitted in writing. The compliance limitations and requirements criteria will be used to evaluate the frequency reduction.

H. Implementation of Erosion Control and Energy Dissipation Measures

Permittees shall implement erosion control and energy dissipation measures as necessary to prevent excessive erosion and channel scouring that may result from the discharge flow.

I. Groundwater Contamination

If groundwater contamination is encountered, then the permittee is to contact the department and, if appropriate, the owner of the collection system receiving the discharge. Since this discharge of contaminated groundwater is not covered under this permit, the permittee shall immediately cease dewatering and apply for a treated groundwater remediation discharge permit.

J. Modification of Permit Attachments

The Department may modify the permit attachments (i.e., DW-NOI, DW-DMR, and DW-RLN forms). The modified forms satisfy the notification and reporting requirements set forth in this permit. If information is submitted on an outdated form, opportunity to resubmit the information shall be provided the permittee, or, at the discretion of the Department, submittals on outdated forms may be accepted.

K. Additional Monitoring Requirements

In addition to monitoring requirements set forth, the Department may request more frequent monitoring.

L. Electronic Reporting

The National Pollutant Discharge Elimination System (NPDES) Electronic Reporting Rule requires electronic reporting of NPDES information rather than the currently required paper based reports from the permitted facilities. To comply with the federal rule, permittees will be required to submit NOIs, RLNs, Reports, and NOTs electronically starting in 2020.

Table of Contents for Appendix A

Standard Conditions that Apply to NPDES and NPP Permits

Section
Page

1. Information Available 1
2. Duty to Comply 1
3. Violations of this permit 1
4. Duty to Reapply 1
5. Need to Halt or Reduce Activity not a Defense 1
6. Duty to Mitigate 1
7. Proper Operation and Maintenance 1
8. Permit Actions 2
9. Property Rights 2
10. Duty to Provide Information 2
11. Inspection and Entry 2
12. Monitoring and Records 2
13. Signatory requirement 3
14. Reporting Requirements 4
15. Bypass 6
16. Upset 7
17. Other Rules and Regulations Liability 8
18. Severability 8
19. Other Conditions that Apply to NPDES and NPP Permits 8
20. Definitions 10
21. Abbreviations 12

Appendix A

Conditions Applicable to all NPDES Permits

The following conditions apply to all NPDES permits:

1. Information Available

All permit applications, fact sheets, permits, discharge data, monitoring reports, and any public comments concerning such shall be available to the public for inspection and copying, unless such information about methods or processes is entitled to protection as trade secrets of the owner or operator under Neb. Rev. Stat. §81-1527, (Reissue 1999) and NDEQ Title 115, Chapter 4.

2. Duty to Comply

a. The permittee must comply with all conditions of this permit. Any permit noncompliance constitutes a violation of the Federal Clean Water Act and the Applicable State Statutes and Regulations and is grounds for enforcement action; for permit termination, revocation and reissuance, or modification; or denial of a permit renewal application.

b. The permittee shall comply with effluent standards or prohibitions established under section 307(a) of the Clean Water Act for toxic pollutants and with standards for sewage sludge use or disposal established under section 405(d) of the CWA within the time provided in the regulations that establish these standards or prohibitions or standards for sewage sludge use or disposal, even if the permit has not yet been modified to incorporate the requirement.

3. Violations of this Permit

a. Any person who violates this permit may be subject to penalties and sanctions as provided by the Clean Water Act.

b. Any person who violates this permit may be subject to penalties and sanctions as provided by the Nebraska Environmental Protection Act.

4. Duty to Reapply

If the permittee wishes to continue an activity regulated by this permit after the expiration date of this permit, the permittee must apply for and obtain a new permit.

5. Need to Halt or Reduce Activity not a Defense

It shall not be a defense for a permittee in an enforcement action that it would have been necessary to halt or reduce the permitted activity in order to maintain compliance with the conditions of this permit.

6. Duty to Mitigate

The permittee shall take all reasonable steps to minimize or prevent any discharge or sludge use or disposal in violation of this permit which has a reasonable likelihood of adversely affecting human health or the environment.

7. Proper Operation and Maintenance

The permittee shall at all times properly operate and maintain all facilities and systems of treatment and control (and related appurtenances) which are installed or used by the permittee to achieve compliance with the conditions of this permit. Proper operation and maintenance also includes effective performance based on designed facility removals, effective management, adequate operator staffing and training, adequate process controls, adequate funding that reflects proper user fee schedules, adequate laboratory controls and appropriate quality assurance procedures. This provision requires the operation of back-up or auxiliary

facilities or similar systems which are installed by a permittee only when the operation is necessary to achieve compliance with the conditions of this permit.

8. Permit Actions

This permit may be modified, revoked and reissued, or terminated for cause. The filing of a request by the permittee for a permit modification, revocation and reissuance, or termination, or a notification of planned changes or anticipated noncompliance does not stay any permit condition.

9. Property Rights

This permit does not convey any property rights of any sort, or any exclusive privilege.

10. Duty to Provide Information

The permittee shall furnish to the Director, within a reasonable time, any information which the Director may request to determine whether cause exists for modifying, revoking and reissuing, or terminating this permit or to determine compliance with this permit. The permittee shall also furnish to the Director upon request, copies of records required to be kept by this permit.

11. Inspection and Entry

The permittee shall allow the Director, or an authorized representative (including an authorized contractor acting as a representative of the Administrator), upon presentation of credentials and other documents as may be required by law, to:

a. Enter upon the permittee's premises where a regulated facility or activity is located or conducted, or where records must be kept under the conditions of this permit;

b. Have access to and copy, at reasonable times, any records that must be kept under the conditions of this permit;

c. Inspect at reasonable times any facilities, equipment (including monitoring and control equipment), practices, or operations regulated or required under this permit; and

d. Sample or monitor at reasonable times, for the purposes of assuring permit compliance or as otherwise authorized by the Clean Water Act, any substances or parameters at any location.

12. Monitoring and Records

a. Samples and measurements taken for the purpose of monitoring shall be representative of the monitored activity.

b. Except for records of monitoring information required by this permit related to the permittee's sewage sludge use and disposal activities, which shall be retained for a period of at least five years (or longer as required by 40 CFR Part 503), the permittee shall retain records of all monitoring information, including all calibration and maintenance records and all original strip chart recordings for continuous monitoring instrumentation, copies of all reports required by this permit, and records of all data used to complete the application for this permit, for a period of at least 3 years from the date of the sample, measurement, report or application. This period may be extended by request of the Director at any time.

c. Records of monitoring information shall include:

i) The date(s), exact place, time and methods of sampling or measurements;

ii) The individual(s) who performed the sampling or measurements;

iii) The date(s) analyses were performed;

iv) The individual(s) who performed the analyses;

v) The analytical techniques or methods used; and

vi) The results of such analyses.

d. Monitoring must be conducted according to test procedures approved under NDEQ Title 119, Chapter 27 002 unless another method is required under 40 CFR Subchapters N – Effluent Guidelines and Standards Parts 425 to 471 or O – Sewer Sludge Parts 501 and 503.

e. Falsifies, Tampers, or Knowingly Renders Inaccurate

i) On actions brought by EPA, the Clean Water Act provides that any person who falsifies, tampers with, or knowingly renders inaccurate any monitoring device or method required to be maintained under this permit shall, upon conviction: be punished by a fine of not more than $10,000, or by imprisonment for not more than 2 years, or both. If a conviction of a person is for a violation committed after a first conviction of such person under this paragraph, punishment is a fine of not more than $20,000 per day of violation, or by imprisonment of not more than 4 years, or both.

ii) On action brought by the State, The Nebraska Environmental Protection Act provides that any person who falsifies, tampers with, or knowingly renders inaccurate any monitoring device or method required to be maintained under this permit shall, upon conviction, be punished pursuant to Neb. Stat. §81-1508.01.

13. Signatory requirements

a. All applications, reports, or information submitted to the Director shall be signed and certified.

i) All permit applications shall be signed as follows:

(a) For a corporation

(i) By a responsible corporate officer: For the purpose of this section, a responsible corporate officer means:

(a) A president, secretary, treasurer, or vice-president of the corporation in charge of a principal business function, or any other person who performs similar policy or decision-making functions for the corporation, or

(b) The manager of one or more manufacturing, production, or operating facilities, provided, the manager is authorized to make management decisions which govern the operation of the regulated facility including having the explicit or implicit duty of making major capital investment recommendations, and initiating and directing other comprehensive measures to assure long term environmental compliance with environmental laws and regulations; the manager can ensure that the necessary systems are established or actions taken to gather complete and accurate information for permit application requirements; and where authority to sign documents has been assigned or delegated to the manager in accordance with corporate procedures.

(b) For a partnership or sole proprietorship

(i) By a general partner or the proprietor.

(c) For a municipality, State, Federal, or other public agency

(i) By either a principal executive officer or ranking elected official. For purposes of this section, a principal executive officer of a Federal agency includes:

(a) The chief executive officer of the agency, or

(b) A senior executive officer having responsibility for the overall operations of a principal geographic unit of the agency (e.g., Regional Administrators of EPA).

b. Reports and Other Information

i) All reports required by permits, and other information requested by the Director shall be signed by a person described in this section [paragraphs13. a. i) (a),(b), or (c)], or by a duly authorized representative of that person. A person is a duly authorized representative only if:

(a) The authorization is made in writing by a person described in paragraphs 13. a. i) (a),(b), or (c);

(b) The authorization specifies either an individual or a position having responsibility for the overall operation of the regulated facility or activity such as the position of plant manager, operator of a well or a well field, superintendent, position of equivalent responsibility, or an individual or position having overall responsibility for environmental matters for the company, (a duly authorized representative may thus be either a named individual or any individual occupying a named position) and;

(c) The written authorization is submitted to the Director.

c. Changes to Authorization

If an authorization of paragraphs 13. a. i) (a),(b), or (c) is no longer accurate because a different individual or position has responsibility for the overall operation of the facility, a new authorization satisfying the requirements of this section must be submitted to the Director prior to or together with any reports, information, or applications to be signed by an authorized representative.

d. Certification

All applications, reports and information submitted as a requirement of this permit shall contain the following certification statement:

i) I certify under penalty of law that this document and all attachments were prepared under my direction or supervision in accordance with a system designed to assure that qualified personnel properly gathered and evaluated the information submitted. Based on my inquiry of the person or persons who manage the system, or those persons directly responsible for gathering the information, the information submitted is, to the best of my knowledge and belief, true, accurate, and complete. I am aware that there are significant penalties for submitting false information, including the possibility of fine and imprisonment for knowing violations.

e. False Statement, Representation, or Certification

i) The CWA provides that any person who knowingly makes any false statement, representation, or certification in any record or other document submitted or required to be maintained under this permit, including monitoring reports or reports of compliance or noncompliance shall, upon conviction, be punished by a fine of not more than $10,000 per violation, or by imprisonment for not more than 6 months per violation, or by both.

ii) The Nebraska Environmental Protection Act provides criminal penalties and sanctions for false statement, representation, or certification in any application, label, manifest, record, report, plan, or other document required to be filed or maintained by the Environmental Protection Act, the Integrated Solid Waste Management Act, the Livestock Waste Management Act or the rules or regulations adopted and promulgated pursuant to such acts.

14. Reporting Requirements

a. Planned Changes

i) The permittee shall give notice to the Director as soon as possible of any planned physical alterations or additions to the permitted facility. Notice is required only when:

(a) The alteration or addition to a permitted facility may meet one of the criteria for determining whether a facility is a new source in NDEQ Title 119, Chapter 4 and 8.

(b) The alteration or addition could significantly change the nature or increase the quantity of pollutants discharged. This notification applies to pollutants which are subject neither to effluent limitations in the permit, nor to notification requirements under NDEQ Title 119, Chapter 15.

(c) The alteration or addition results in a significant change in the permittee's sludge use or disposal practices, and such alteration, addition, or change may justify the application of permit conditions

that are different from or absent in the existing permit, including notification of additional use or disposal sites not reported during the permit application process or not reported pursuant to an approved land application plan. The sludge program is not delegated to the State so notification to the EPA Regional Administrator in addition to the State is required.

b. Anticipated Noncompliance

The permittee shall give advance notice to the Director of any planned changes in the permitted facility or activity which may result in noncompliance with permit requirements.

c. Transfers

This permit is not transferable to any person except after notice to the Director. The Director may require modification or revocation and reissuance of the permit to change the name of the permittee and incorporate such other requirements as may be necessary under NDEQ Title 119, Chapter 24 in some cases, modification or revocation and reissuance is mandatory.

d. Monitoring Reports

i) Monitoring results shall be reported at the intervals specified elsewhere in this permit.

ii) Monitoring results must be reported on a Discharge Monitoring Report (DMR) or forms provided or specified by the Director.

iii) Monitoring results shall be submitted on a quarterly basis using the reporting schedule set forth below, unless otherwise specified in this permit or by the Department.

Monitoring Quarters	**DMR Reporting Deadlines**
January - March	April 28
April - June	July 28
July - September	October 28
October - December	January 28

iv) For reporting results of monitoring of sludge use or disposal practices

v) Additional reports may be required by the EPA Regional Administrator.

vi) If the permittee monitors any pollutant more frequently than required by the permit using test procedures approved in NDEQ Title 119, Chapter 27 002, or another method required for an industry-specific waste stream under 40 CFR Subchapters N – Effluent Guidelines and Standards Parts 425 to 471 and O – Sewer Sludge Parts 501 and 503, the results of such monitoring shall be included in the calculation and reporting of the data submitted in the DMR or sludge reporting form specified by the Director or EPA Regional Administrator.

vii) Calculations for all limitations which require averaging of measurements shall utilize an arithmetic mean unless otherwise specified by the Director in the permit.

e. Compliance Schedules

Reports of compliance or noncompliance with, or any progress reports on, interim and final requirements contained in any compliance schedule of this permit shall be submitted no later than 14 days following each schedule date.

f. Twenty-four Hour Reporting

i) The permittee shall report any noncompliance which may endanger human health or the environment. Any information shall be provided orally within 24 hours from the time the permittee becomes aware of the circumstances. A written submission shall also be provided within 5 days of the time the permittee becomes aware of the circumstances. The written submission shall contain a description of the noncompliance and its cause; the period of noncompliance, including exact dates and times, and if the noncompliance has not been corrected, the anticipated time it is expected to continue; and steps taken or planned to reduce, eliminate, and prevent reoccurrence of the noncompliance.

ii) The following shall be included as information which must be reported within 24 hours under this paragraph.

(a) Any unanticipated bypass which exceeds any effluent limitation in this permit.

(b) Any upset which exceeds any effluent limitation in this permit.

(c) Violation of a maximum daily discharge limitation for any of the pollutants listed by the Director in the permit to be reported within 24 hours.

g. The Director may waive the written report on a case-by-case basis for reports under section 14. f. ii) (a), (b) and (c) if the oral report has been received within 24 hours.

h. Other noncompliance

The permittee shall report all instances of noncompliance not reported under paragraphs d., e., and f. of this section, at the time monitoring reports are submitted. The reports shall contain the information listed in paragraph f. of this section.

i. Other information

Where the permittee becomes aware that it failed to submit any relevant facts in a permit application, or submitted incorrect information in a permit application or in any report to the Director, it shall promptly submit such facts or information.

j. Noncompliance Report Forms

i) Noncompliance Report Forms are available from the Department and shall be submitted with or as the written noncompliance report.

ii) The submittal of a written noncompliance report does not relieve the permittee of any liability from enforcement proceedings that may result from the violation of permit or regulatory requirements.

15. Bypass

a. Definitions

i) Bypass means the intentional diversion of waste streams from any portion of a treatment facility.

ii) Severe property damage means substantial physical damage to property, damage to the treatment facilities which causes them to become inoperable, or substantial and permanent loss of natural resources which can reasonably be expected to occur in the absence of a bypass. Severe property damage does not mean economic loss caused by delays in production.

b. Bypass Not Exceeding Limitations

The permittee may allow any bypass to occur which does not cause effluent limitations to be exceeded, but only if it also is for essential maintenance to assure efficient operation. These bypasses are not subject to the provisions of paragraphs 15.c. and d. of this section.

c. Notice

i) Anticipated Bypass

If the permittee knows in advance of the need for a bypass, it shall submit prior notice, if possible at least ten days before the date of the bypass.

ii) Unanticipated Bypass

The permittee shall submit notice of an unanticipated bypass as required in paragraph 14.f. of this section (24-hour notice).

d. Prohibition of Bypass

Bypass is prohibited, and the Director may take enforcement action against a permittee for bypass, unless:

i) Bypass was unavoidable to prevent loss of life, personal injury, or severe property damage;

ii) There were no feasible alternatives to the bypass, such as the use of auxiliary treatment facilities, retention of untreated wastes, or maintenance during normal periods of equipment downtime. This condition is not satisfied if adequate back-up equipment should have been installed in the exercise of reasonable engineering judgment to prevent a bypass which occurred during normal periods of equipment downtime or preventive maintenance; and

iii) The permittee submitted notices as required under paragraph 15.c. of this section.

e. The Director may approve an anticipated bypass, after considering its adverse effects, if the Director determines that it will meet the three conditions listed above in paragraph 15.d.

16. Upset

a. Definition

Upset means an exceptional incident in which there is unintentional and temporary noncompliance with technology based permit effluent limitations because of factors beyond the reasonable control of the permittee. An upset does not include noncompliance to the extent caused by operational error, improperly designed treatment facilities, inadequate treatment facilities, lack of preventive maintenance, or careless or improper operation.

b. Effect of an Upset

An upset constitutes an affirmative defense to an action brought for noncompliance with such technology based permit effluent limitations if the requirements of paragraph 16.c. of this section are met. No determination made during administrative review of claims that noncompliance was caused by upset, and before an action for noncompliance, is final administrative action subject to judicial review.

c. Conditions Necessary for a Demonstration of Upset.

A permittee who wishes to establish the affirmative defense of upset shall demonstrate, through properly signed, contemporaneous operating logs, or other relevant evidence that:

i) An upset occurred and that the permittee can identify the cause(s) of the upset;

ii) The permitted facility was at the time being properly operated;

iii) The permittee submitted notice of the upset as required in paragraph 14.f. ii) (a), of this section (24-hour notice).

iv) The permittee complied with any remedial measures required under paragraph (d) of this section.

d. Burden of Proof

In any enforcement proceeding, the permittee seeking to establish the occurrence of an upset has the burden of proof.

17. Other Rules and Regulations Liability

The issuance of this permit in no way relieves the obligation of the permittee to comply with other rules and regulations of the Department.

18. Severability

If any provision of this permit is held invalid, the remainder of this permit shall not be affected.

19. Other Conditions that Apply to NPDES and NPP Permits

a. Land Application of Wastewater Effluent

The permittee shall be permitted to discharge treated domestic wastewater effluent by means of land application in accordance with the regulations and standards set forth in NDEQ Title 119, Chapter 12 002.

The Wastewater Section of the Department must be notified in writing if the permittee chooses to land apply effluent.

b. Toxic Pollutants

The permittee shall not discharge pollutants to waters of the state that cause a violation of the standards established in NDEQ Titles 117, 118 or 119. All discharges to surface waters of the state shall be free of toxic (acute or chronic) substances which alone or in combination with other substances, create conditions unsuitable for aquatic life outside the appropriate mixing zone.

c. Oil and Hazardous Substances/Spill Notification

Nothing in this permit shall preclude the initiation of any legal action or relieve the permittee from any responsibilities, liabilities or penalties under section 311 of the Clean Water Act. The permittee shall conform to the provisions set forth in NDEQ Title 126, Rules and Regulations Pertaining to the Management of Wastes. If the permittee knows, or has reason to believe, that oil or hazardous substances were released at the facility and could enter waters of the state or any of the outfall discharges authorized in this permit, the permittee shall immediately notify the Department of a release of oil or hazardous substances. During Department office hours (i.e., 8:00 a.m. to 5:00 p.m., Monday through Friday, except holidays), notification shall be made to the Nebraska Department of Environmental Quality at telephone numbers (402) 471-2186 or (877) 253-2603 (toll free). When NDEQ cannot be contacted, the permittee shall report to the Nebraska State Patrol for referral to the NDEQ Immediate Response Team at telephone number (402) 471-4545. It shall be the permittee's responsibility to maintain current telephone numbers necessary to carry out the notification requirements set forth in this paragraph.

d. Removed Substances

i) Solids, sludge, filter backwash or other pollutants removed in the course of treatment or control of wastewater shall be disposed of at a site and in a manner approved by the Nebraska Department of Environmental Quality.

(a) The disposal of nonhazardous industrial sludges shall conform to the standards established in or to the regulations established pursuant to 40 CFR Part 257.

(b) The disposal of sludge shall conform to the standards established in or to the regulations established pursuant to 40 CFR Part 503.

(c) If solids are disposed of in a licensed sanitary landfill, the disposal of solids shall conform to the standards established in NDEQ Title 132.

ii) Publicly owned treatment works shall dispose of sewage sludge in a manner that protects public health and the environment from any adverse effects which may occur from toxic pollutants as defined in Section 307 of the Clean Water Act.

iii) This permit may be modified or revoked and reissued to incorporate regulatory limitations established pursuant to 40 CFR Part 503.

e. Representative Sampling

i) Samples and measurements taken as required within this permit shall be representative of the discharge. All samples shall be taken at the monitoring points specified in this permit and, unless otherwise specified, before the effluent joins or is diluted by any other waste stream, body of water, or substance. Monitoring points shall not be changed without notification to the Department and with the written approval of the Director.

ii) Composite sampling shall be conducted in one of the following manners;

(a) Continuous discharge - a minimum of one discrete aliquot collected every three hours,

(b) Less than 24 hours - a minimum of hourly discrete aliquots or a continuously drawn sample shall be collected during the discharge, or

(c) Batch discharge - a minimum of three discrete aliquots shall be collected during each discharge.

(d) Composite samples shall be collected in one of the following manners:

(i) The volume of each aliquot must be proportional to either the waste stream flow at the time of sampling or the total waste stream flow since collection of the previous aliquot,

(ii) A number of equal volume aliquots taken at varying time intervals in proportion to flow,

(iii) A sample continuously collected in proportion to flow, and

(e) Where flow proportional sampling is infeasible or non-representative of the pollutant loadings, the Department may approve the use of time composite samples.

(f) Grab samples shall consist of a single aliquot collected over a time period not exceeding 15 minutes.

iii) All sample preservation techniques shall conform to the methods adopted in NDEQ Title 119, Chapter 21 006 unless:

(a) In the case of sludge samples, alternative techniques are specified in 40 CFR Part 503, or

(b) Other procedures are specified in this permit.

iv) Flow Measurements

Appropriate flow measurement devices and methods consistent with accepted scientific practices shall be used to insure the accuracy and reliability of measurements. The devices shall be installed, calibrated and maintained to insure the accuracy of the measurements. The accepted capability shall be consistent with that type of device. Devices selected shall be capable of measuring flows with a maximum deviation of +/- 10%. The amount of deviation shall be from the true discharge rates throughout the range of expected discharge volumes. Guidance can be obtained from the following references for the selection, installation, calibration and operation of acceptable flow measurement devices:

(a) "Water Measurement Manual," U.S. Department of the Interior, Bureau of Reclamation, Third Edition, Revised Reprint, 2001.
(Available online at http://www.usbr.gov/tsc/techreferences/mands/wmm/index.htm)

(b) "NPDES Compliance Flow Measurement Manual, "U.S. Environmental Protection Agency, Office of Water Enforcement, Publication MCD-77, September 1981, 147 pp.
(Available online at http://www.epa.gov/nscep, and enter 'NPDES Compliance Flow Measurement Manual, Publication MCD-77' in the search box)

f. Changes of Loadings to Publicly Owned Treatment Works (POTWs)

All POTWs must provide adequate notice to the Director of the following:

i) Any new introduction of pollutants into the POTW from an indirect discharger which would be subject to NDEQ Title 119, Chapter 26, if it were directly discharging those pollutants;

ii) Any substantial change in the volume or character of pollutants being introduced into that POTW by a source introducing pollutants into the POTW at the time of issuance of the permit.

iii) For purposes of this paragraph, adequate notice shall include information on the quality and quantity of effluent introduced into the POTW, and any anticipated impact of the change on the quantity or quality of effluent to be discharged from the POTW.

20. Definitions

Administrator: The Administrator of the USEPA.

Aliquot: An individual sample having a minimum volume of 100 milliliters that is collected either manually or in an automatic sampling device.

Annually: Once every calendar year.

Authorized Representative: Individual or position designated the authorization to submit reports, notifications, or other information requested by the Director on behalf of the Owner under the circumstances that the authorization is made in writing by the Owner, the authorization specifies the individual or position who is duly authorized, and the authorization is submitted to the Director.

Bimonthly: Once every other month.

Biosolids: Sewage sludge that is used or disposed through land application, surface disposal, incineration, or disposal in a municipal solid waste landfill.

Biweekly: Once every other week.

Bypass: The intentional diversion of wastes from any portion of a treatment facility.

Certifying Official: See Section 13, Standard Conditions above.

Daily Average: An effluent limitation that cannot be exceeded and is calculated by averaging the monitoring results for any given pollutant parameter obtained during a 24-hour day.

Department: Nebraska Department of Environmental Quality.

Director: The Director of the Nebraska Department of Environmental Quality.

Industrial Discharge: Wastewater that originates from an industrial process and / or is noncontact cooling water and / or is boiler blowdown.

Industrial User: A source of indirect discharge (a pretreatment facility).

Monthly Average: An effluent limitation that cannot be exceeded. It is calculated by averaging any given pollutant parameter monitoring results obtained during a calendar month.

Operator: A person (often the general contractor) designated by the owner who has day to day operational control and/or the ability to modify project plans and specifications related to the facility.

Owner: A person or party possessing the title of the land on which the activities will occur; or if the activity is for a lease holder, the party or individual identified as the lease holder; or the contracting government agency responsible for the activity.

Outfall: A discernible, confined and discrete conveyance, including but not limited to any pipe, ditch, channel, tunnel, conduit, well, discrete fissure, or container from which pollutants are or may be discharged into Waters of the State.

Passive Discharge: A discharge from a POTW that occurs in the absence of an affirmative action and is not authorized by the NPDES permit (e.g. discharges due to a leaking valve, discharges from an overflow structure) and / or is a discharge from an overflow structure not designed as part of the POTW (e.g. discharges resulting from lagoon berm / dike breaches).

Publicly Owned Treatment Works (POTW): A treatment works as defined by Section 212 of the Clean Water Act (Public Law 100-4) which is owned by the state or municipality, excluding any sewers or other conveyances not leading to a facility providing treatment.

Semiannually: Twice every year.

Significant Industrial User (SIU): All industrial users subject to Categorical Pretreatment Standards or any industrial user that, unless exempted under Chapter 1, Section 105 of NDEQ Title 119, discharges an average of 25,000 gallons per day or more of process water; or contributes a process waste stream which makes up 5 percent or more of the average dry weather hydraulic or organic capacity of the POTW; or is designated as such by the Director on the basis that the industrial user has a reasonable potential for adversely affecting the POTW's operation or for violating any National Pretreatment Standard or requirement.

Sludge: Any solid, semisolid, or liquid waste generated from a municipal, commercial, or industrial wastewater treatment plant, water supply treatment plant, or air pollution control facility or any other such waste having similar characteristics and effect.

30-Day Average: An effluent limitation that cannot be exceeded. It is calculated by averaging any given pollutant parameter monitoring results obtained during a calendar month.

Total Toxic Organics (TTO): The summation of all quantifiable values greater than 0.01 milligrams per liter (mg/l) for toxic organic compounds that may be identified elsewhere in this permit. (If this term has application in this permit, the list of toxic organic compounds will be identified, typically in the Limitations and Monitoring Section(s) and/or in an additional Appendix to this permit.)

Toxic Pollutant: Those pollutants or combination of pollutants, including disease causing agents, after discharge and upon exposure, ingestion, inhalation or assimilation into an organism, either directly from the environment or indirectly by ingestion through food chains will, on the basis of information available to the administrator, cause death, disease, behavioral abnormalities, cancer, genetic mutations, physiological malfunction (including malfunctions in reproduction), or physical deformations in such organisms or their offspring.

Upset: An exceptional incident in which there is unintentional and temporary noncompliance with technology based permit effluent limitations because of factors beyond the reasonable control of the permittee, excluding such factors as operational error, improperly designed or inadequate treatment facilities, or improper operation and maintenance or lack thereof.

Volatile Organic Compounds (VOC): The summation of all quantifiable values greater than 0.01 milligrams per liter (mg/l) for volatile, toxic organic compounds that may be identified elsewhere in this permit. (See the definition for Total Toxic Organics above. In many instances, VOCs are defined as the volatile fraction of the TTO parameter. If the term VOC has application in this permit, the list of toxic organic compounds will be identified, typically in the Limitations and Monitoring Section(s) and/or in an additional Appendix to this permit.)

Waters of the State: All waters within the jurisdiction of this state including all streams, lakes, ponds, impounding reservoirs, marshes, wetlands, watercourses, waterways, wells, springs, irrigation systems, drainage systems, and all other bodies or accumulations of water, surface and underground, natural or artificial, public or private, situated wholly or partly within or bordering upon the state.

Weekly Average: An effluent limitation that cannot be exceeded. It is calculated by averaging any given pollutant parameter monitoring results obtained during a fixed calendar week. The permittee may start their week on any weekday but the weekday must remain fixed. The Department approval is required for any change of the starting day.

"X" Day Average: An effluent limitation defined as the maximum allowable "X" day average of consecutive monitoring results during any monitoring period where "X" is a number in the range of one to seven days.

21. Abbreviations

CFR: Code of Federal Regulations

kg/Day: Kilograms per Day

MGD: Million Gallons per Day

mg/L: Milligrams per Liter

NOI: Notice of Intent

NDEQ: Nebraska Department of Environmental Quality

NDEQ Title 115: Rules of Practice and Procedure

NDEQ Title 117: Nebraska Surface Water Quality Standards

NDEQ Title 118: Ground Water Quality Standards and Use Classification

NDEQ Title 119: Rules and Regulations Pertaining to the Issuance of Permits under the National Pollutant Discharge Elimination System

NDEQ Title 126: Rules and Regulations Pertaining to the Management of Wastes

NDEQ Title 132: Integrated Solid Waste Management Regulations

NPDES: National Pollutant Discharge Elimination System

NPP: Nebraska Pretreatment Program

POTW: Publicly Owned Treatment Works

µg/L: Micrograms per Liter

WWTF: Wastewater Treatment Facility

Appendix B – State Resource and Public Drinking Water Supply Streams

This appendix identifies stream segments and water bodies that must be identified as State Resource Waters or Public Drinking Water Supplies on the Notice of Intent for General NPDES permits. This information will be used by the Department to determine if additional review of the NOI or other procedures as described in permit. Discharges to state resource waters (listed in **bold**) are not allowed.

This appendix references stream segments by County to facilitate the completion of the Notice of Intent and Relocation Notice forms. In filling out these forms, the applicant need only identify the stream segment or water body by name; the other information supplied is not needed on the forms.

Adams County

Platte River Kearney County line to the Hall County Line – Public Drinking Water; (Stream Segment MP2-10000)

Boyd County

Missouri River from the South Dakota border to the Knox County line - Class A State Resource Water; (Stream segment: NI1-10000)

Brown County

Calamus River from its headwaters to the Rock County line - Class B State Resource Water; (Stream segments: LO2-11300, LO2-11400, LO2-11500 & LO2-11600)

Niobrara River from Rock Creek to the Highway 137 Bridge; Class A State Resource Water; (Stream Segment: NI3-10000)

Long Pine Creek from its headwaters to the confluence of Bone Creek; Class B State Resource Water; (Stream segments: NI3-12400 and NI3-12500)

Buffalo County

Platte River from the Kearney Canal Return to the Hall County Line – Public Drinking Water; (Stream Segment ; MP2-10000)

Burt County

Missouri River from the Thurston County Line to the Washington County Line – Public Drinking Water; (Stream Segment: MT1-10000)

Cass County

Platte River from the Saunders County Line to Missouri River - Public Drinking Water; (Stream Segment: LP1-10000)

Missouri River from the Confluence of the Platte River to the Otoe County Line – Public Drinking Water; (Stream Segment: NE1-10000)

Rock Creek from its headwaters to the confluence of the Missouri River – Public Drinking Water; (Stream Segment: NE1-13700)

Cedar County

Missouri River from the Knox County line to the Dixon County line - Class A State Resource Water; Public Drinking Water; (Stream segment: MT2-10000)

Cherry County

Niobrara River from the Borman Bridge (Section 8, T33N, R27W) to Chimney Creek - Class A State Resource Water (Stream Segment: NI3-20000)

Dakota County

Missouri River from the Confluence of the Big Sioux River to the Thurston County Line – Public Drinking Water; (Stream Segment: MT1-10000)

Missouri River from the Dixon County line to the confluence of the Big Sioux River - Class A State Resource Water; Public Drinking Water (Stream Segment: MT2-10000)

Dawes County

Chadron Creek from its headwaters to its confluence with the White River - Public Drinking Water Standards; (Stream Segment: WH1-11300)

Cunningham Creek from its headwaters to its confluence with Indian Creek - Class A State Resource Water; (Stream segment: WH1-11710)

Dead Man's Creek from its headwaters to the Sioux County line - Public Drinking Water Standards; (Stream Segment: WH1-30100)

Soldier Creek from the Sioux County line to its confluence with the White River - Class A State Resource Water; Public Drinking Water; (Stream segment: WH1-20300)

Squaw Creek from its headwaters to the National Forest Boundary - Class A State Resource Water; (Stream segment WH1-20120)

White River from the Sioux County line to its confluence with Soldier Creek - Class B State Resource Water; Public Drinking Water; (Stream segment: WH1-30000)

White River from Soldier Creek to the South Dakota border - Public Drinking Water standards; (Stream segments: WH1-10000 and WH1-20000)

Dixon County

Missouri River from the Cedar County line to the Dakota County line - Class A State Resource Water; Public Drinking Water (Stream Segment: MT2-10000)

Douglas County

Missouri River from the Washington County Line to the Sarpy County Line – Public Drinking Water; (Stream Segment MT1-10000)

Garfield County

Calamus River from the Loup County line to the confluence with North Loup River - Class B State Resource Water; (Stream segment: LO2-11300)

Hall County

Platte River from Buffalo County Line to Merrick County Line - Public Drinking Water; (Stream Segment ; MP2-10000)

Hamilton County

Platte River from Hall County Line to the confluence of Wood River – Public Drinking Water; (Stream Segment MP2-10000)

Holt County

Elkhorn River from the confluence of the North and South Forks to Holt Creek - Class B State Resource Water; (Stream segment: EL4-40000)

Keith County

North Platte River from Kingsley Dam to the confluence of Whitetail Creek - Class B State Resource Water; (Stream segment: NP1-40000)

Otter Creek from its headwaters to Lake C.W. McConaughy - Class B State Resource Water; (Stream segment: NP2-10300)

Jefferson County

Little Blue River from Big Sandy Creek to Nebraska-Kansas border – Public Drinking Water; (Stream segment LB1-10000)

Kearney County

Platte River from the Kearney Canal Return to the Hall County Line – Public Drinking Water; (Stream Segment ; MP2-10000)

Keya Paha County

Niobrara River from the Cherry County line to Chimney Creek and from Rock Creek to the State Highway 137 Bridge - Class A State Resource Water; (Stream Segment: NI3-20000 & NI3-10000)

Knox County

Missouri River from the Boyd County Line to the Cedar County line - Class A State Resource Water; Public Drinking Water; (Stream Segment: MT2-10000)

Niobrara River from the Boyd/Holt County line to its confluence with the Missouri River - Class A State Resource Water (Stream Segment: NI2-10000)

Verdigre Creek from the North boundary of the town of Verdigre (Sec 5, T30N, R6W) to its confluence with the Niobrara River - Class A State Resource Water (Stream Segment: NI2-10100)

Loup County

Calamus River from the Rock County line to the Garfield County line - Class B State Resource Water; (Stream Segment: LO2-11300)

Merrick County

Platte River from Hall County Line to the confluence of the Wood River – Public Drinking Water; (Stream Segment MP2-10000)

Nemaha County

Missouri River from the Otoe County line to the Richardson County line – Public Drinking Water; (Stream Segment: NE1-10000)

Otoe County

Missouri River from the Cass County line to the Nemaha County line – Public Drinking Water; (Stream Segment: NE1-10000)

Richardson County

Unnamed creek running through Indian Cave State Park (Headwaters originate on private property near the park.) - Class A State Resource Water, (Stream Segment: NE1-10700)

Missouri River from the Nemaha County Line to the Kansas State line – Public Drinking Water; (Stream Segment: NE1-10000)

Rock County

Calamus River from the Brown County line to the Loup County line - Class B State Resource Water; (Stream Segment: LO2-11300)

Long Pine Creek segments near the Brown County line (Long Pine Creek is located in Brown County, but drainage from Rock County flows to it.) - Class B State Resource Water; (Stream segments: NI3-12400 and NI3-12500)

Niobrara River from the Brown County line to the State Highway 137 Bridge - Class A State Resource Water; (Stream Segment: NI3-10000)

Sarpy County

Platte River from the confluence of the Elkhorn River to Missouri River- Public Drinking Water; (Stream Segment: LP1-10000)

Missouri River from the Douglas County Line to the Confluence of the Platte River – Public Drinking Water; (Stream Segment: MT1-10000)

Saunders County

Platte River from the confluence of the Elkhorn River to Cass County Line- Public Drinking Water; (Stream Segment: LP1-10000)

Platte River from the Confluence of Clear Creek to the Elkhorn River – Public Drinking Water; (Stream Segment: LP1-20000)

Sioux County

Dead Man's Creek from the Dawes County line to its confluence with the White River; Public Drinking Water Standards - (Stream Segment: WH1-30100)

Middle Fork Soldier Creek from its headwaters to its confluence with Soldier Creek - Class A State Resource Water; (Stream segment: WH1-20310)

Soldier Creek from its headwaters to the Dawes County line - Class A State Resource Water; (Stream segments: WH1-20300 & WH1-20400)

White River from its headwaters to the Dawes County line - Class B State Resource Water; Public Drinking Water standard; (Stream segments: WH1-30000 & WH1-40000)

Thurston County

Missouri River from the Dakota County Line to the Burt County Line – Public Drinking Water; (Stream Segment MT1-10000)

Washington County

Missouri River from the Burt County Line to the Douglas County Line – Public Drinking Water; (Stream Segment MT1-10000)

Nebraska Department of Environmental Quality

Wastewater Section

1200 'N' Street, Suite 400, The Atrium
PO Box 98922
Lincoln, NE 68509-8922
Tel. 402/471-4220
Fax 402/471-2909

DW-NOI

Notice of Intent (NOI) for Requesting Dewatering Discharges Authorization Under the General NPDES Permit NEG671000 2017

Submission of this Notice of Intent fulfills the requirements set forth in Part II of NPDES General Permit Number NEG671000. By submission of this Notice of Intent the applicant is requesting authorization to discharge under the terms and conditions of said permit, and is agreeing to meet all of the terms and conditions set forth in said permit.

Once authorization to discharge is granted violations of the terms and conditions of the permit may result in the initiation of enforcement proceedings pursuant to sections 81-1508 through 81-1508.02 of the Nebraska Environmental Protection Act (Reissue 1987 and Cum. Supp. 1994). Among the enforcement options authorized by the Act are civil penalties of up to $10,000 per day per violation.

The permit should be consulted for additional information on the completion of this NOI. Questions concerning the NOI or the permit should be directed to the Wastewater Section at (402) 471-4220. Written requests and submittals should be sent to the Wastewater Section at the address set forth on page 4 of this NOI.

1. Facility Certifying Official / Owner or Operator

If both the owner and the operator are to be jointly responsible for permit compliance, then both must be identified. If not, only the owner or the operator, whichever meets the requirements as certifying official, is responsible for permit compliance should be identified.

Owner or Operator Name: _____

_____

2. Identification and Location of Sources

a. Facility Name:_____

b. Facility Location: (location description, not mail address):

_____

_____

c. Legal Description(Outfall Location or Land Application Site):

_____ Quarter of the _____ Quarter, Section _____, Township _____ N, Range _____ (E or W),

County_____

d. Receiving Stream or Waterbody: _____
(Closest stream or waterbody for land application sites)

e. Is the Receiving Stream listed in Appendix B of the permit? Yes No
(If yes, written notification from the department for authorization to discharge is required. No discharges will be allowed to State Resource Waters. The discharge site may be denied due to potential for water

quality impacts. Addition information concerning the dewatering and potential impact of the discharge on water quality may be required.**)**

f. Is this a direct discharge into a waterbody listed in NDEQ Title 117, Chapter 6? **Yes** **No**

g. Is the dewatering discharge to a Municipal Separate Storm Sewer System? **Yes** **No**

h. Have you notified the Municipal Separate Storm Sewer System operator? **Yes** **No**

i. Have you contacted the Nebraska Game and Parks Commission been contacted concerning impact(s) to the listed endangered or threatened species or their critical habitat(s)? **Yes** **No**

j. Have you contacted the Nebraska Historical Society concerning impact(s) to historic sites? **Yes** **No**

k. Please provide a brief description of any controls used to dissipate energy so as to prevent channel erosion and scouring at the discharge site/receiving stream.

_____

_____

_____

_____

3. Certifying Official and Authorized Representative

The responsibilities and requirements of the "Certifying Official" and the "Authorized Representative" are set forth on page 4 of this NOI. If both the owner and the operator are to be jointly responsible for permit compliance, then an Authorized Representative for both must be identified. Only one Authorized Representative can be specified. An Authorized Representative need not be identified if an owner/operator wishes to be the sole contact for the Department.

a. Certifying Official

Name: _____ Title: _____

Mail Address: _____

City: _____ State: _____ Zip Code: _____

Telephone: _____Email(optional)_____

b. Authorized Representative

Name: _____ Title: _____

Mail Address: _____

City: _____ State: _____ Zip Code: _____

Telephone: _____Email(optional)_____

4. Discharge Information

a. How many discharge outfalls are present? _____

For each outfall, identify the following information:

b. Outfall 1:

1) What is the source of the discharge? (i.e. chlorinated municipal water, storm water, surface water or ground water):

_____

2) Anticipated Start-Up Date: _____ Anticipated Completion Date: _____

3) Anticipated Discharge Flow Rate: _____ Anticipated Discharge Frequency: _____

c. Outfall 2:

1) What is the source of the discharge? (i.e. chlorinated municipal water, storm water, surface water or ground water):

_____

2) Anticipated Start-Up Date: _____ Anticipated Completion Date: _____

3) Anticipated Discharge Flow Rate: _____ Anticipated Discharge Frequency: _____

d. Outfall 3:

1) What is the source of the discharge? (i.e. chlorinated municipal water, storm water, surface water or ground water):

_____

2) Anticipated Start-Up Date: _____ Anticipated Completion Date: _____

3) Anticipated Discharge Flow Rate: _____ Anticipated Discharge Frequency: _____

5. **Identification of Potential Pollutants in the Discharge**

Identify any pollutants that you know may be potentially present in the discharge or any materials stored in the vicinity that if spilled could contaminate the discharge. Also identify any ground water contamination plumes, previous spills or other events that you know have occurred and that may contribute pollutants to the discharge.

_____

_____

_____

_____

_____

_____

6. Certification

I certify under penalty of law, that this document and all attachments were prepared under my direction or supervision in accordance with a system designed to assure that qualified personnel properly gathered and evaluated the information submitted. Based on my inquiry of the person or persons who manage the system or those persons directly responsible for gathering the information, the information submitted is, to the best of my knowledge and belief, true, accurate and complete. I am aware that there are significant penalties for submitting false information including the possibility of fine and imprisonment for knowing violations.

I further certify that:

I, or qualified members of my staff, have reviewed and understand the terms and conditions of NPDES General Permit Number NEG671000;

The facility identified in Section 1 of this NOI meets the "Eligibility" requirements and is not excluded by the "Limitation of Coverage" requirements, set forth in Part I. C. of the permit; and

I understand that the submission of this NOI obligates the facility identified in Section 1 of this NOI to comply with the terms and conditions of the Permit NEG671000, provided authorization to discharge is obtained.

_____ _____

Certifying Official's Signature | Date Signed

_____ _____

Certifying Official's Printed Name | Title

Qualifications and Responsibilities of the "Certifying Official" and the "Authorized Representative"
The qualifications and responsibilities of the "Certifying Official" are set forth in NDEQ Title 119 Chapter 13 002:

All permit applications submitted to the Department shall be signed:

002.01 – For a corporation by a responsible corporate officer;

002.02 - For a partnership or in the case of a sole proprietorship by a general partner or the proprietor; and

002.03 - For a municipal, State, Federal, or other public facility by either a principal executive officer or ranking elected official.

The qualifications and responsibilities for the "authorized representative" are set forth in NDEQ Title 119 Chapter 13 003. All other correspondence, reports and DW-DMR's shall be signed by a person designated in 002.01 through 002.03 or a duly authorized representative if such representative is responsible for the overall operation of the facility from which the discharge originates; the authorization is made in writing by the person designated under 002.01 through 002.03 and the written authorization is submitted to the Director. The authorized representative may also sign DW-NOIs, if the Owner/Operator has specifically authorized them to perform this task in a previous DW-NOI or in other written documentation.

Submit the completed NOI to:

U.S. Postal Service Address:

Wastewater Section
Nebraska Department of Environmental Quality
PO Box 98922
Lincoln, NE 68509-8922
Telephone: (402) 471-4220

Alternate Carrier Address:

Wastewater Section
Nebraska Department of Environmental Quality
1200 'N' Street, The Atrium, Suite 400
Lincoln, NE 68509

THREATENED & ENDANGERED SPECIES GUIDANCE CHECKLIST

Disclaimer: This checklist was developed for guidance purposes only in an effort to assist permit applicants to identify potential locations of threatened and endangered species that could be affected by discharge activities. Completion of this checklist is not a requirement for permit authorization and is not intended to be used as a substitute for a professional environmental review. The use of this form does not relieve the permittee from further review or enforcement action by the Nebraska Department of Environmental Quality (NDEQ) or the Nebraska Game and Parks Commission (NGPC)

1. Does the action area drain to a stream of concern? ☐ Yes ☐ No
   (See attached Stream and River Reaches of Concern for Nebraska Fish Species map.)

2. Does the action area drain to rivers, streams, ponds, lakes or wetlands within the range of American burying beetle? (*See attached American Burying Beetle Distribution map.*) ☐ Yes ☐ No

3. Does the action area drain to a Salt Creek, Little Salt Creek, Rock Creek or saline wetlands in Lancaster or Saunders County? ☐ Yes ☐ No

4. Does the action area drain to Lodgepole Creek from Kimball to the Wyoming State line? ☐ Yes ☐ No

5. Does the action area drain to wetlands or wet meadows in the range of the western prairie fringed orchid or small white lady's slipper. (*These are both species of orchids. See attached Orchid Distribution map.*) ☐ Yes ☐ No

6. Does the action area drain to a river within the range of interior least tern or piping plover? (*See attached Tern & Plover Distribution map*.) ☐ Yes ☐ No

7. Does the action area drain to a river, stream, lake, pond, or wetland within the range of massasauga? (*See attached Massasauga Distribution map.*) ☐ Yes ☐ No

8. Does the action area drain to a river within the range of river otter? (*See attached River Otter Distribution map*.) ☐ Yes ☐ No

9. Does the action drain to wetlands or to the Republican, Platte, Loup, Middle Loup, North Loup, or Niobrara Rivers within the primary whooping crane migration corridor? (*See attached Primary Migration Corridor of Whooping Crane map*.) ☐ Yes ☐ No

If you answered "no" to all questions, a review by NGPC may not be needed (*see disclaimer above*). Include this form with your permit application.

If you answered "yes" to any of these questions, consultation with the Nebraska Game and Parks Commission may be necessary. Include this form with your permit application. Permit authorizations will vary from those identified in Table 1-2 depending on the additional time required to evaluate potential impacts.

All NOI submissions received without documentation relating to threatened and endangered species will be considered incomplete.

If you have questions, please call the Environmental Analyst Supervisor at (402) 471-5438.

Additional Resources

• Nebraska Game and Parks Commission Nongame and Endangered Species
http://outdoornebraska.ne.gov/wildlife/programs/nongame/pdf/E_T_Species_List.pdf

• Range Maps for Nebraska's Threatened and Endangered Species (includes listing by county)
http://digitalcommons.unl.edu/nebgamewhitepap/30/

• Endangered, threatened, proposed, and Candidate species in Nebraska Counties (USFWS)
http://www.fws.gov/mountain-prairie/endspp/CountyLists/Nebraska.pdf

• Listings and occurrences for Nebraska (USFWS)
http://ecos.fws.gov/tess_public/pub/stateListingAndOccurrenceIndividual.jsp?state=NE

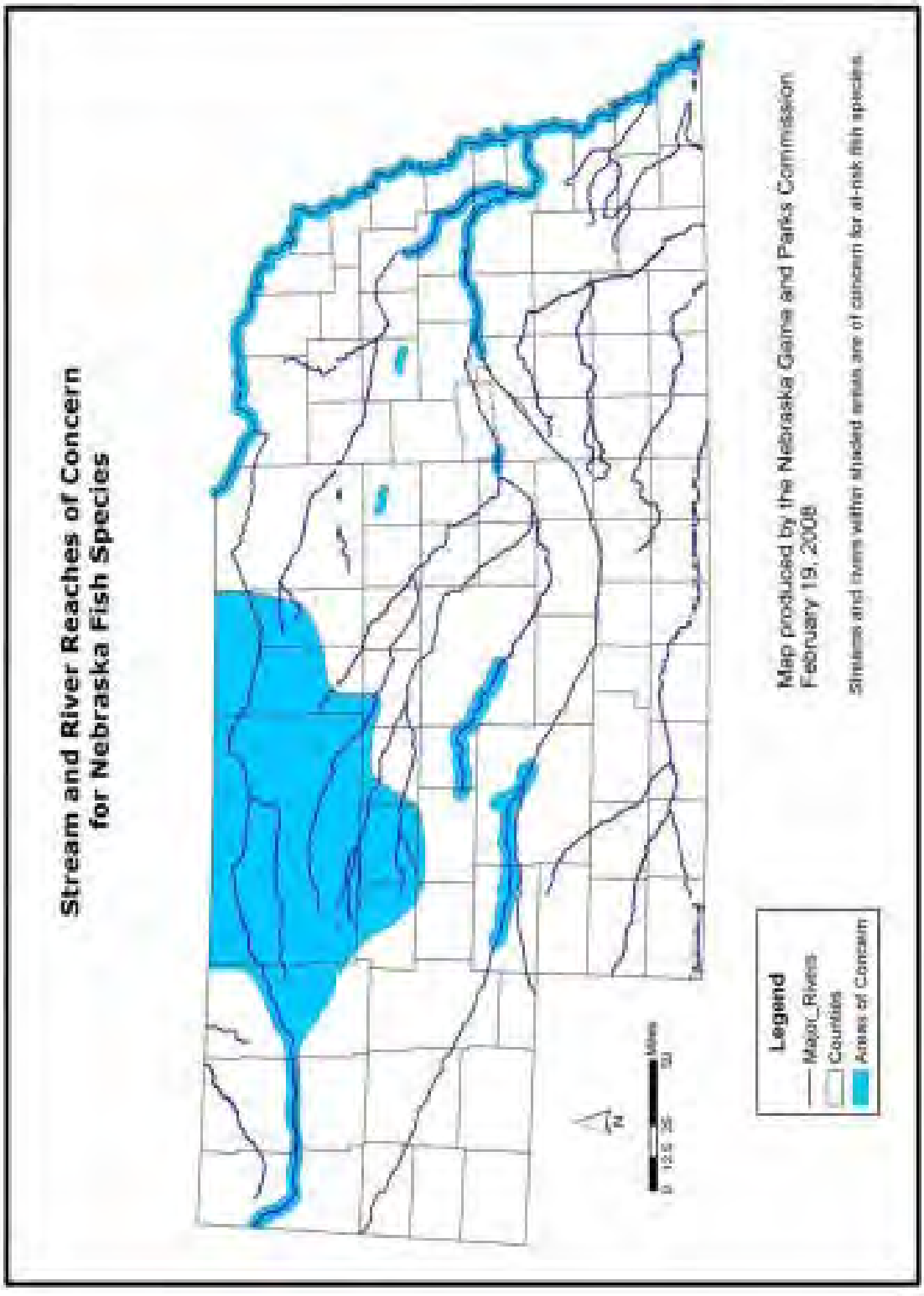
Stream and River Reaches of Concern
for Nebraska Fish Species
Map produced by the Nebraska Game and Parks Commission
February 19, 2008
Streams and rivers within shaded areas are of concern for at-risk fish species.
Legend
Major_Rivers
Counties
Areas of Concern
Miles
0 12.5 25 50
N

Estimated Current Range of American Burying Beetle (*Nicrophorus americanus*)

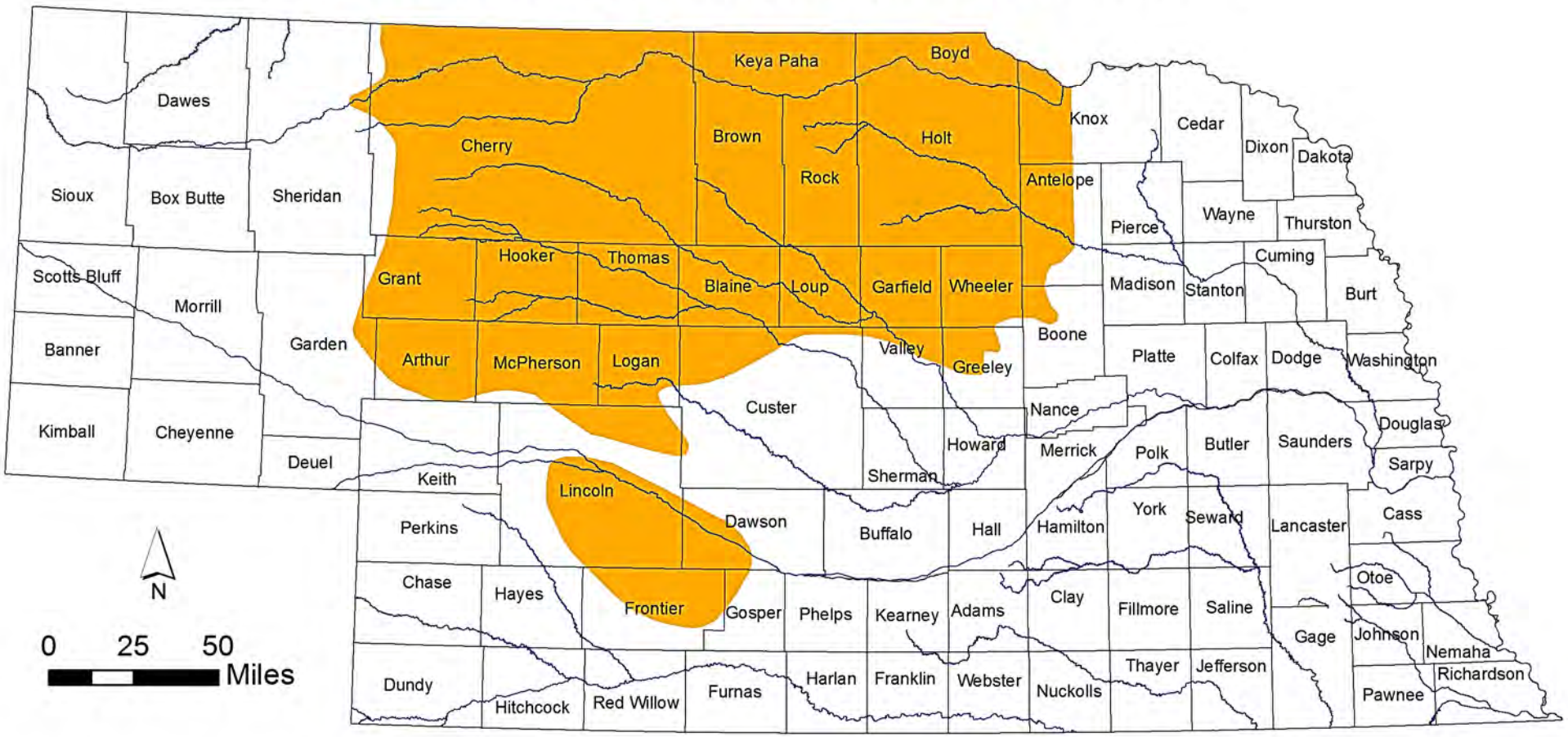

The Sandhills portion of this range was based largely on a distribution model created using data collected from 2001 through 2011 by various government and non-government organizations. Logistic regression was used to predict probability of occurrence of American Burying Beetle based on data collected in the Sandhills and a number of climate, soil, and land cover variables. The model was created by The US Fish and Wildlife Service, University of Nebraska Kearney, Rainwater Basin Joint Venture, and Nebraska Game and Parks Commission. The Sandhills probability model and range map was combined with other known distribution data to create the overall range map shown here. Work is being undertaken to create comparable models outside of the Sandhills.

Map produced by the Nebraska Natural Heritage Program, Nebraska Game and Parks Commission, March 2014.

Estimated Current Range of Saltwort (*Salicornia rubra*)

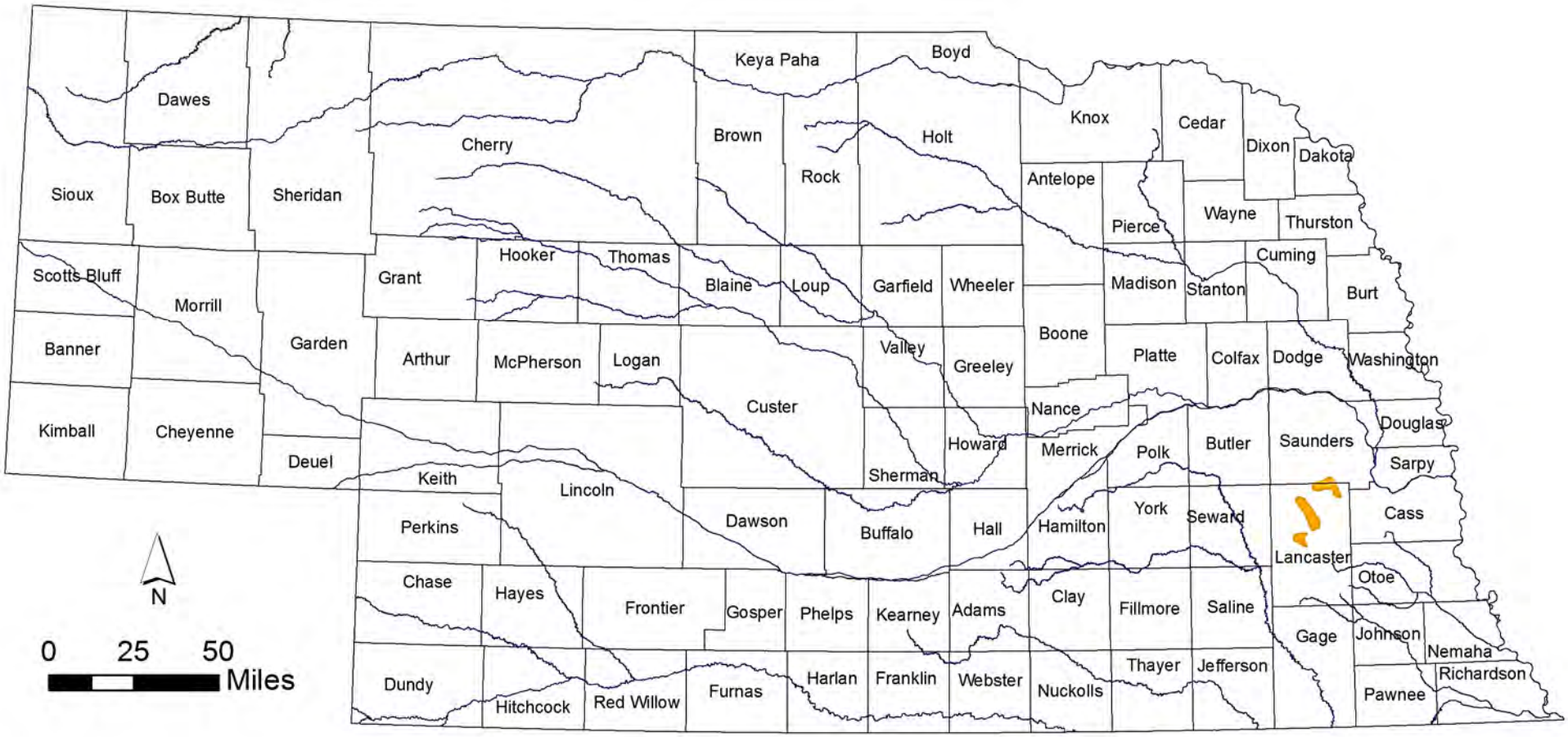

NEBRASKA GAME PARKS

NEBRASKA Natural Heritage Program

Nebraska Natural Heritage Program,
Nebraska Game and Parks Commission
February 2014

Estimated Current Range of Salt Creek Tiger Beetle (*Cicindela nevadica lincolniana*)

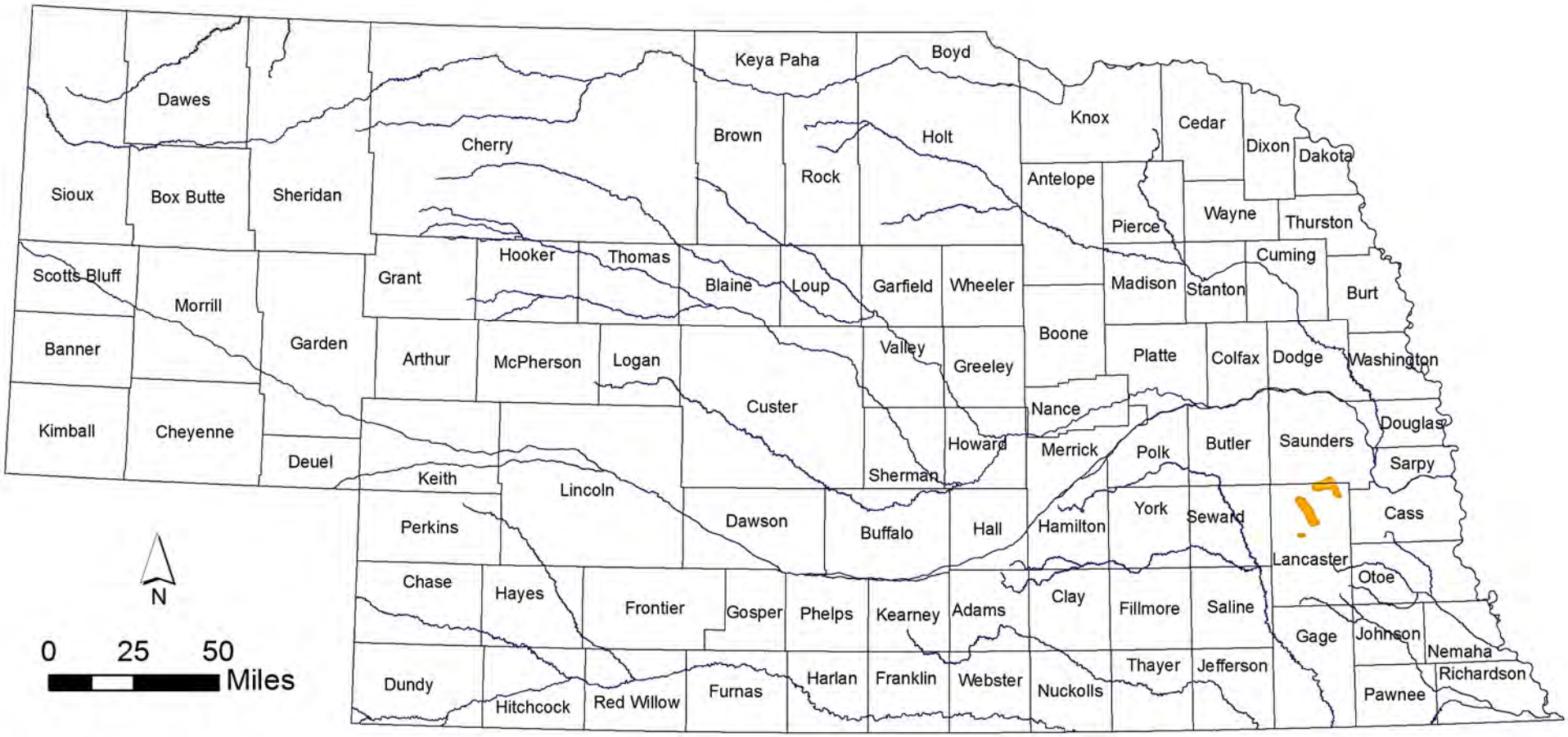

NEBRASKA GAME PARKS

NEBRASKA Natural Heritage Program

Nebraska Natural Heritage Program,
Nebraska Game and Parks Commission
February 2014

Estimated Current Range of Colorado Butterfly Plant (*Gaura neomexicana ssp. coloradensis*)

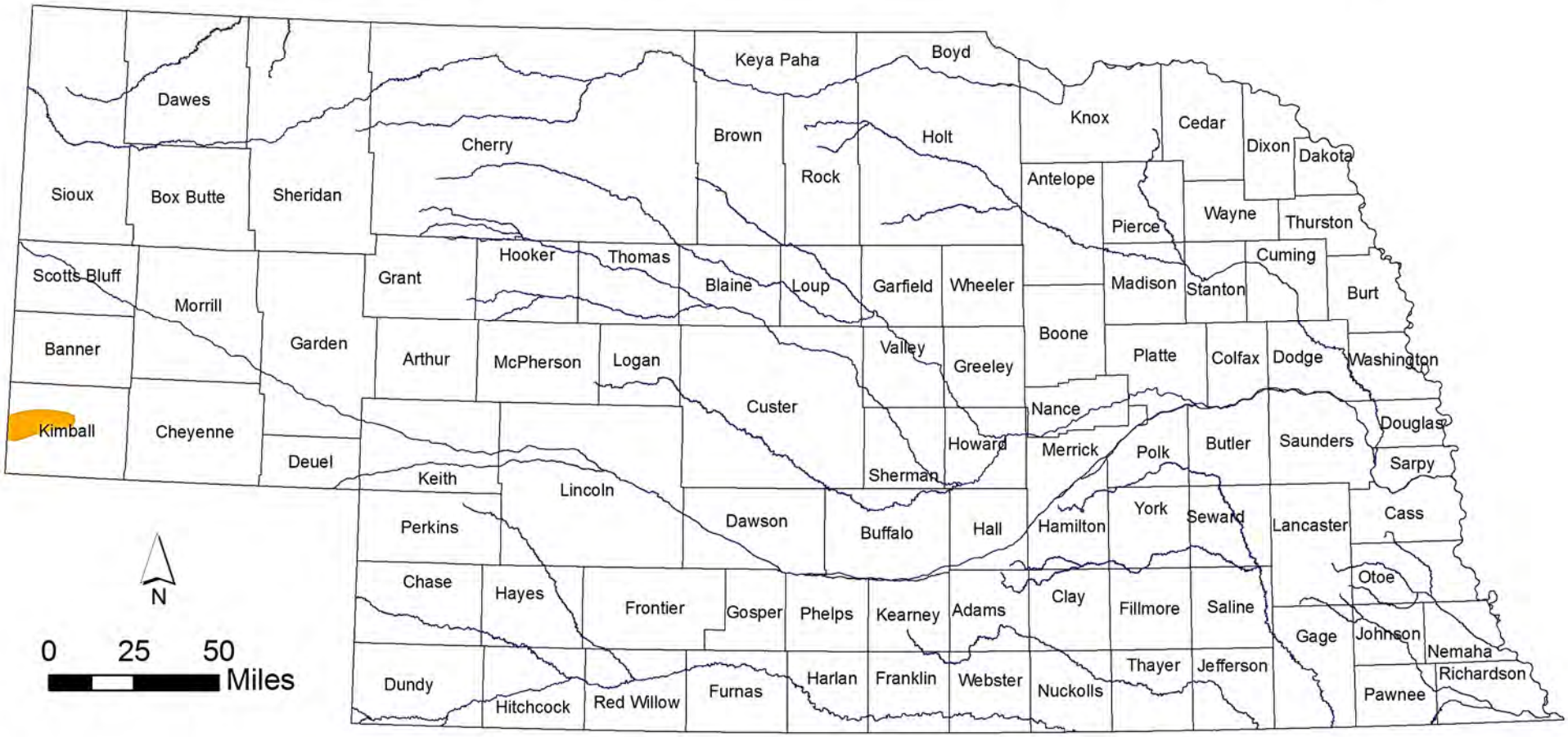

NEBRASKA GAME PARKS

NEBRASKA Natural Heritage Program

Nebraska Natural Heritage Program,
Nebraska Game and Parks Commission
May 2011

Estimated Current Range of Western Prairie Fringed Orchid (*Platanthera praeclara*)

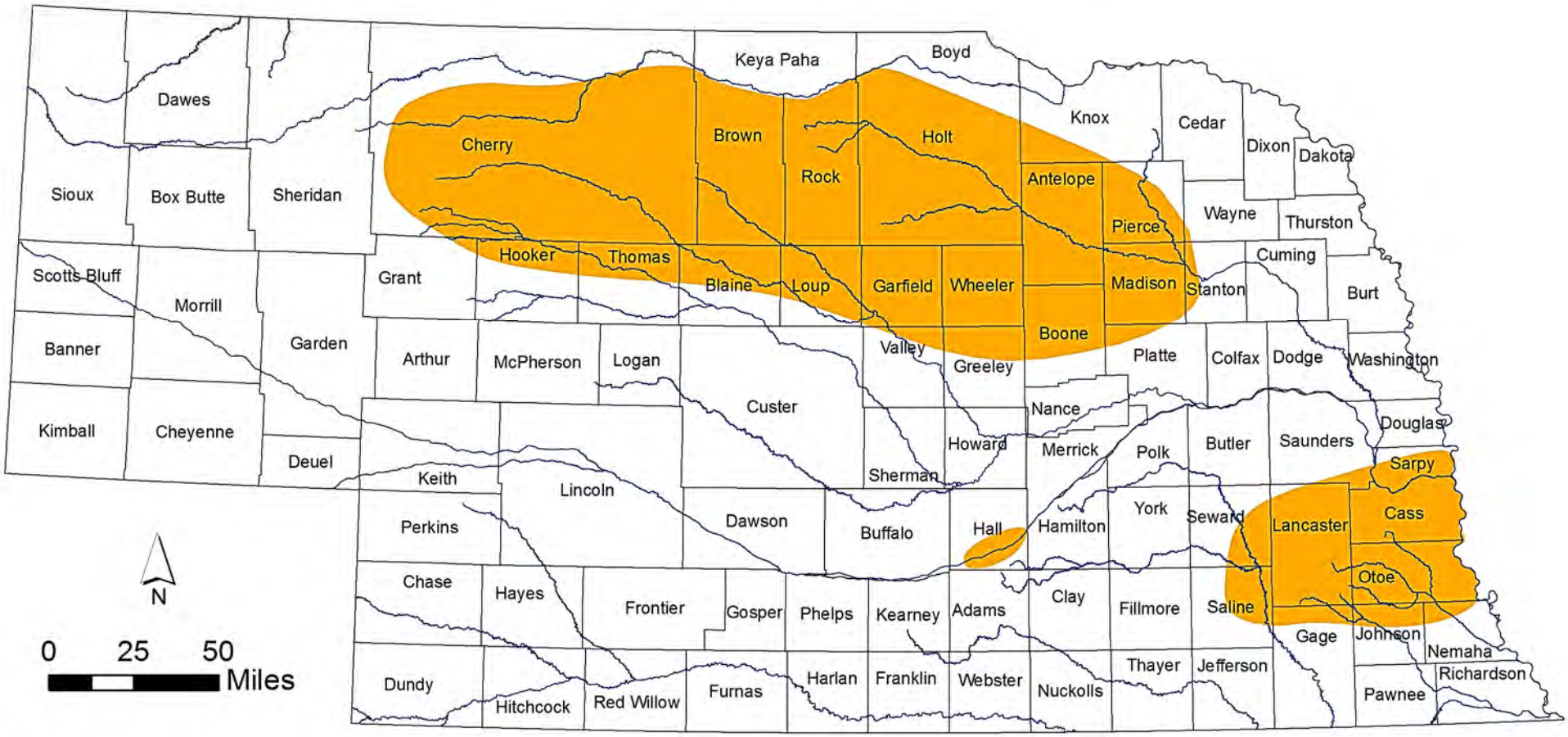

NEBRASKA GAME PARKS

NEBRASKA Natural Heritage Program

Nebraska Natural Heritage Program,
Nebraska Game and Parks Commission
September 2012

Estimated Current Breeding Range of Piping Plover (*Charadrius melodus*) and Interior Least Tern (*Sternula antillarum athalassos*)

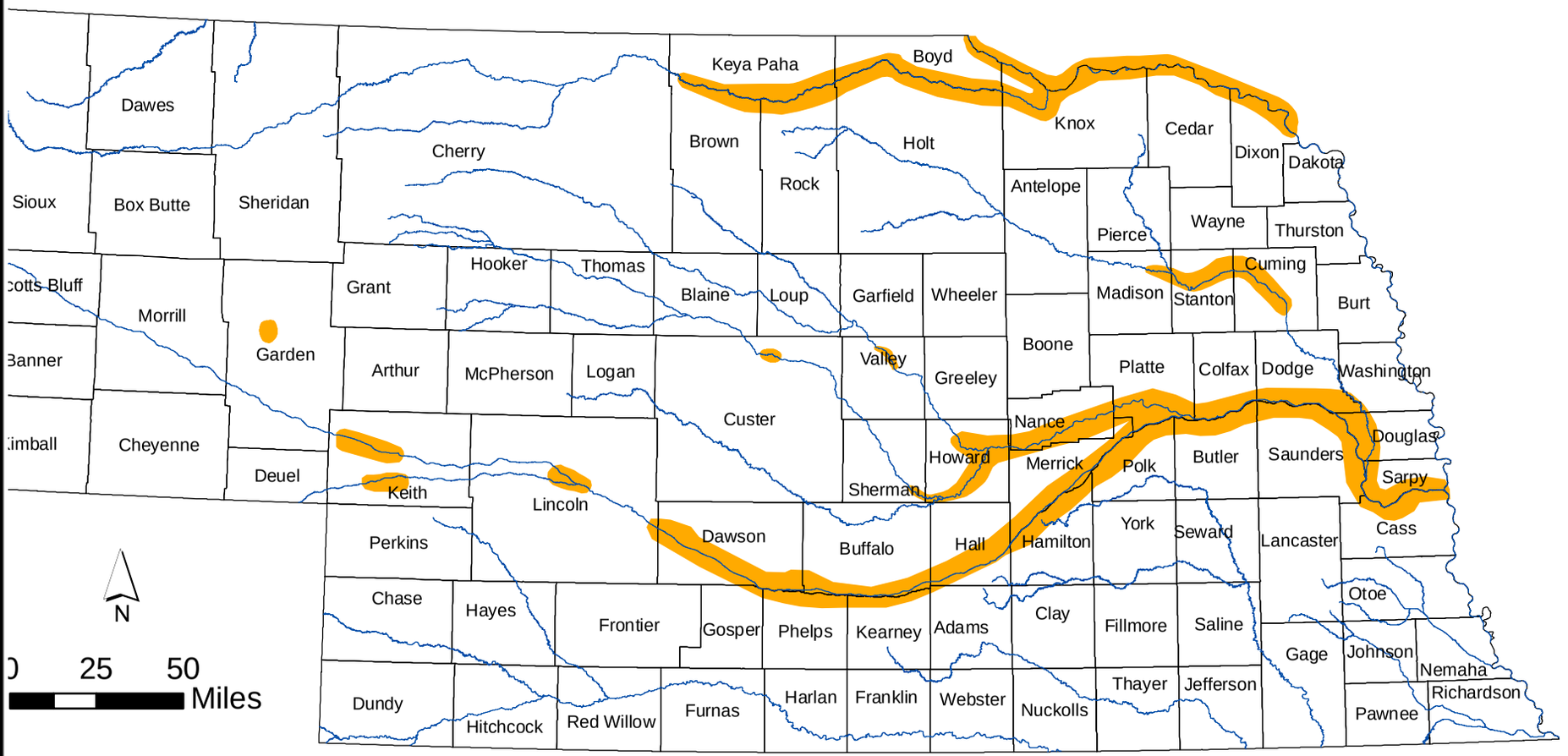

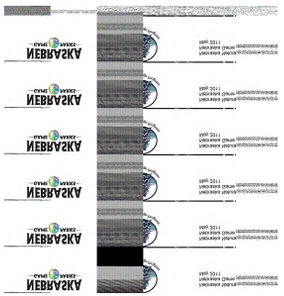

Garden County portion of map pertains to Piping Plover only.

Nebraska Natural Heritage Program,
Nebraska Game and Parks Commission
August 2011

Estimated Current Range of Massasauga (*Sistrurus catenatus*)

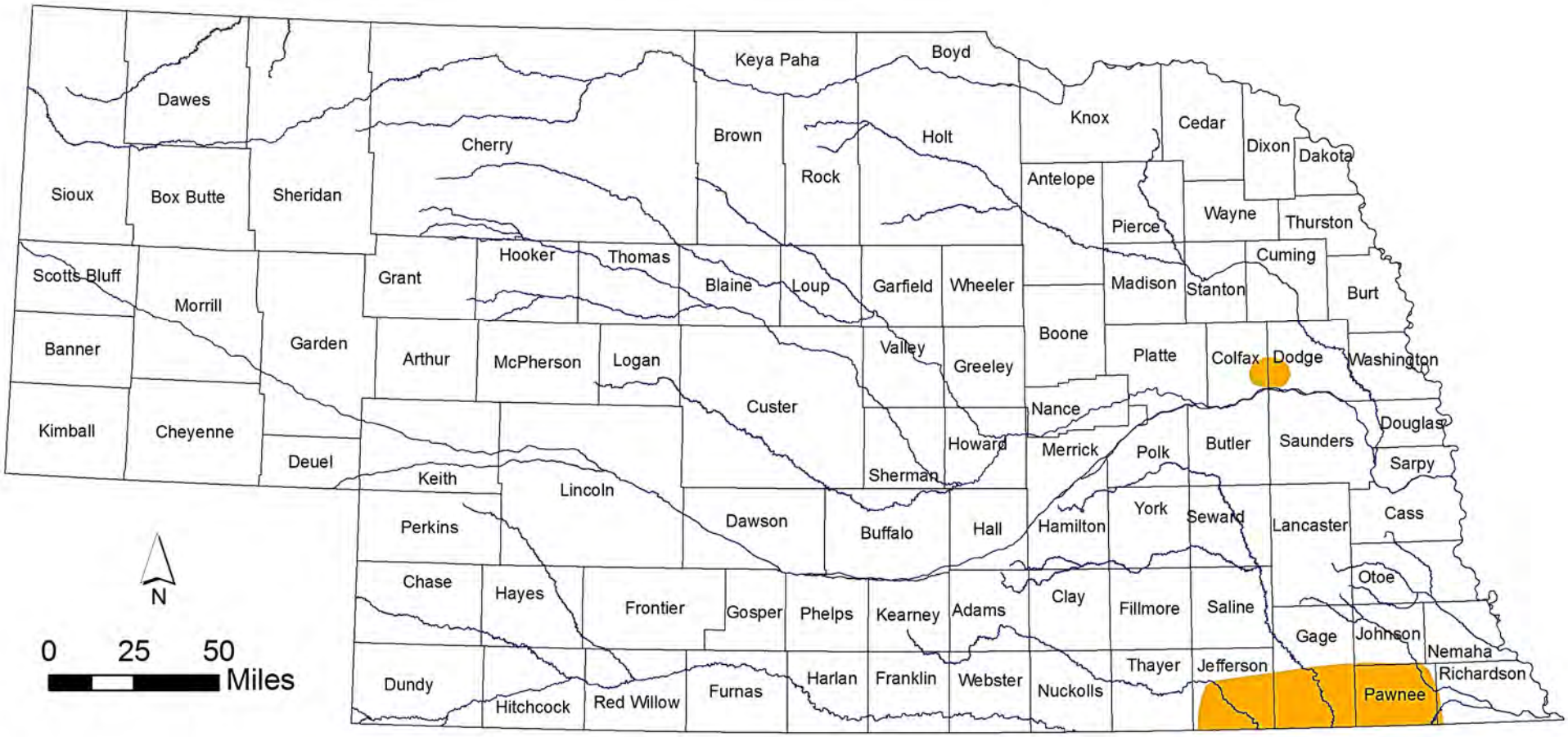

NEBRASKA GAME PARKS

NEBRASKA Natural Heritage Program

Nebraska Natural Heritage Program,
Nebraska Game and Parks Commission
May 2011

Estimated Current Range of River Otter (*Lontra canadensis*)

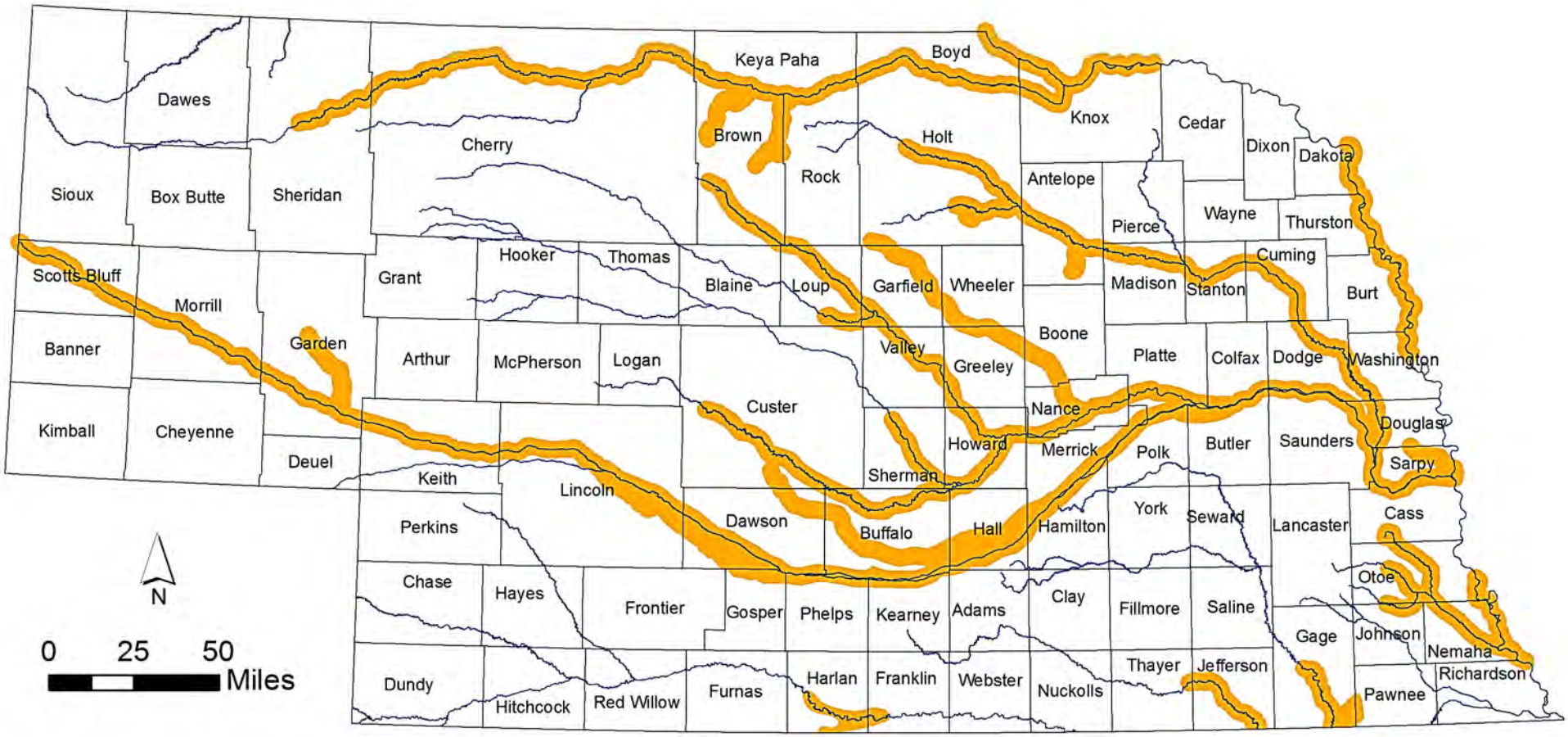

NEBRASKA GAME PARKS

NEBRASKA Natural Heritage Program

Nebraska Natural Heritage Program,
Nebraska Game and Parks Commission
June 2015

Whooping Crane (*Grus americana*): Migration Use Area and USFWS-designated Critical Habitat

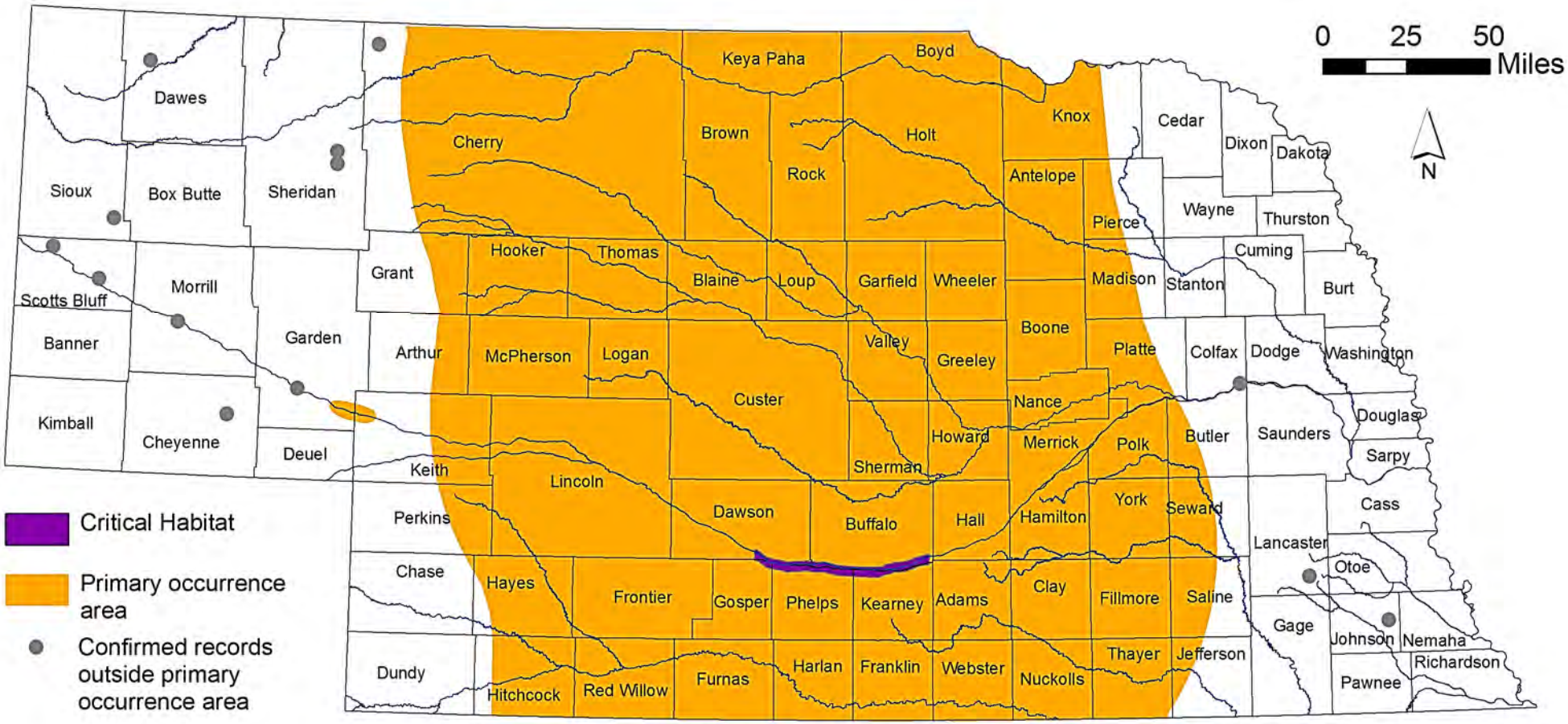

The primary occurrence area is a modification of the area identified by the U.S. Fish and Wildlife Service (USFWS) as encompassing 95% of documented Whooping Crane migratory stopovers between 1975 and 2007. The modification consisted of incorporating additional locations known to have repeated use. Data source: USFWS. State-specific Nebraska flyway for Whooping Crane. Vector digital data Unpublished shapefile received October 27, 2008 from USFWS, Region 6, Grand Island, NE.

Critical Habitat areas are considered essential for the conservation of a listed species. Data source: U.S. Fish and Wildlife Service, Region 2. 2003. Whooping Crane critical habitat. Vector digital data. Downloaded October 29, 2008 from http://crithab.fws.gov.

Confirmed records are current through Fall 2010 (Source: USFWS, Region 6).

Map produced by the Nebraska Natural Heritage Program, Nebraska Game and Parks Commission, July 6, 2011.

Nebraska Department of Environmental Quality

Wastewater Section

1200 'N' Street, Suite 400, The Atrium
PO Box 98922
Lincoln, NE 68509-8922
Tel. 402/471-4220
Fax 402/471-2909

DW-DMR

Dewater Discharges Discharge Monitoring Report (DMR)
Authorized Under NPDES General Permit NEG671000 2017

This DW-DMR is to be submitted monthly (i.e., within 28 days after the end of each calendar month), unless alternative submittal arrangements are approved. Any pH, Oil & Grease, or Total Suspended Solids monitoring results that are not in compliance with the permit effluent limits shall be reported to the Department within 24 hours (Telephone 402/471-4220) and a written non-compliance report must be submitted within 5 days (See Appendix A, Sections D.8 and D.9 in the permit). If the appropriate information is included on this form, it may be used as a non-compliance report form and to provide notification of project completion. Be sure to fill in all of the appropriate blanks below and sign on the back of this form.

NPDES Tracking Number: NEG671 ____ _____ _____

Project Owner or Operator: _____

Project Name & Location: _____

When was the discharge initiated? (mo/day/yr) _____

Are you terminating coverage with the submission of this DMR?_____

If you are terminating coverage with this submission, what was the final discharge date? _____

What is the Outfall Designations:_____

What is the Source of the outfall? (i.e. well, pit, foundation pump, etc.)_____

_____

Circle the Calendar Quarter to which this report applies: **January through March**

April through June **July through September** **October through December**

Discharge Report for the month (Specify Calendar Month)_____

Pollutant	Discharge Limitations		Discharge Concentration		Number of Samples	Sample Type
	30-Day Average	Daily Maximum	30-Day Average[3]	Daily Maximum[2]		
Flow [1]	Report as MGD	Report as MGD				
Total Petroleum Hydrocarbons	Report as mg/L	10 mg/L				
Total Suspended Solids [4]	Report as mg/L	30 or 90 mg/L				
pH	6.5 Standard Units	9.0 Standard Units				

Discharge Report for the month (Specify Calendar Month)_____

Pollutant	Discharge Limitations		Discharge Concentration		Number of Samples	Sample Type
	30-Day Average	Daily Maximum	30-Day Average[3]	Daily Maximum[2]		
Flow [1]	Report as MGD	Report as MGD				
Total Petroleum Hydrocarbons	Report as mg/L	10 mg/L				
Total Suspended Solids [4]	Report as mg/L	30 or 90 mg/L				
pH	6.5 Standard Units	9.0 Standard Units				

Discharge Report for the month (Specify Calendar Month)_____

Pollutant	Discharge Limitations		Discharge Concentration		Number of Samples	Sample Type
	30-Day Average	Daily Maximum	30-Day Average[3]	Daily Maximum[2]		
Flow [1]	Report as MGD	Report as MGD				
Total Petroleum Hydrocarbons	Report as mg/L	10 mg/L				
Total Suspended Solids [4]	Report as mg/L	30 or 90 mg/L				
pH	6.5 Standard Units	9.0 Standard Units				

Footnote:

(1) If there is no flow during calendar month, enter "0" in the Monthly Average and Daily Average boxes for flow. The other reporting boxes in that month's table may be left blank

(2) The highest valued determined by the monitoring results for any given pollutant obtained during a 24-hour day.

(3) The calculated valued determined by averaging the monitoring results for any given pollutant obtained during calendar month.

(4) The Daily Average Limitation is 90 mg/L for construction excavation site discharges and 30 mg/L for other sites.

Abbreviations: MGD = Million gallons per day mg/L = milligrams per Liter

Summary of Physical Characteristic Examination Findings or Other Information:

PCE results may be summarized herein or the PCE form may be attached. Examples of "Other Information": explain non-compliances or unusual conditions, request termination of permit coverage or identify attachments including any additional monitoring results requested by the Department.

Discharge Report for week or month(s) of _____

_____

_____

_____

_____

Certification

I certify under penalty of law, that this document and all attachments were prepared under my direction or supervision in accordance with a system designed to assure that qualified personnel properly gathered and evaluated the information submitted. Based on my inquiry of the person or persons who manage the system or those persons directly responsible for gathering the information, the information submitted is, to the best of my knowledge and belief, true, accurate and complete. I am aware that there are significant penalties for submitting false information including the possibility of fine and imprisonment for knowing violations.

_____ _____

Certifying Official's Signature or Authorized Representative **Date Signed**

_____ _____

Print Name **Title**

Requirements for and Responsibilities of Certifying Official and Authorized Representative

The "Certifying Official" is responsible for signing all permit applications and must meet the requirements set forth in NDEQ Title 119 Chapter, 13 002:

"All permit applications submitted to the Department shall be signed:

002.01 – For a corporation, by a responsible corporate officer;

002.02 - For a partnership or a sole proprietorship by a general partner or the proprietor; and

002.03 - For a municipal, State, Federal, or other public facility by either a principal executive officer or ranking elected official."

The qualifications and responsibilities for the "authorized representative" are set forth in NDEQ Title 119 Chapter 13 003. All other correspondence, reports and DW-DMR's shall be signed by a person designated in 002.01 through 002.03 or a duly authorized representative if such representative is responsible for the overall operation of the facility from which the discharge originates; the authorization is made in writing by the person designated under 002.01 through 002.03 and the written authorization is submitted to the Director. The authorized representative may also sign DW-NOIs, if the Owner/Operator has specifically authorized them to perform this task in a previous DW-NOI or in other written documentation as set forth in permit Section C.2.g.

Submit the completed DW-DMR form to one of the following addresses:

US Postal Service Address

Wastewater Section
Nebraska Department of Environmental Quality
PO Box 98922
Lincoln, NE 68509-8922

Alternate Carrier Address

Wastewater Section
Nebraska Department of Environmental Quality
The Atrium, 1200 N Street, Suite 400
Lincoln, NE 68509

Nebraska Department of Environmental Quality

Wastewater Section

1200 'N' Street, Suite 400, The Atrium
PO Box 98922
Lincoln, NE 68509-8922
Tel. 402/471-4220
Fax 402/471-2909

Physical Characteristics Examination (PCE) Instructions
Authorized by NPDES General Permit NEG671000 2017

The General Dewatering Permit requires that Physical Characteristic Examinations be made in addition to the monitoring required in the general permit. Discharge authorizations are contingent upon the conductance of these examinations (i.e., Physical Characteristic Examinations are required).

1. Physical Characteristic Examination (PCE) Procedure

This procedure involves qualitative observations for characteristics of color, turbidity, odors, surface sheens, septic conditions, or any other unusual conditions (e.g., off-gassing). PCE observations are to be made both *in situ* and on grab samples. PCE results are to be recorded on the attached report form or other approved format. PCE results are to be used as indicators of potential pollution problems. If none of the previous listed characteristics are noted a report is not required.

2. Immediate Notification and Follow-Up

a. When a discharge displays, any of these characteristics: turbidity, color, off gassing, sheens, films, hydrocarbon contamination, or foaming and odors.

b. This may indicate possible presence of excessive pollution. At these concentrations or amounts that are indicated requires that the discharge be discontinued immediately and the Department notified.

c. The discharge shall be discontinued immediately and the NDEQ shall be contacted: If there is any evidence the discharge is causing distress to fish, aquatic organisms, plant life, wildlife and/or livestock, or creating a public health concern.

d. Following the notification, the permittee shall take appropriate follow-up actions as specified by the Department. These actions may include, but are not necessarily limited to: a follow-up investigation, additional testing, alternative disposal options, and/or treatment. It is also possible that the discharge may be allowed without further action if it is determined that the discharge would not result in excessive pollution.

e. Excessive pollution is defined as pollution in amounts that would result in a violation of a permit limit or of water quality criteria set forth in NDEQ Title 117 and 118. "Water shall be free from human-induced pollution which causes". These narrative and aesthetic standards for surface waters include:

1) Noxious odors;

2) Floating, suspended, colloidal, or settleable materials that produce objectionable films, colors, turbidity, or deposits; and

3) The occurrence of undesirable or nuisance aquatic life (e.g., algal blooms).

3. Periodic Reporting

In addition to the immediate notification requirements described above, a summary report of the findings of the Physical Characteristic Examination procedure results is to be submitted as an attachment to the discharge monitoring reports (DW-DMR's) that are required pursuant to Appendix A, Subsection D of the NPDES permit.

4. Record Keeping

Records of the physical examination results need to be kept and need to include the following information:

a. The date and time of the observation

b. Name of the observer; and

c. Summary information on the observations made.

Nebraska Department of Environmental Quality
Wastewater Section

1200 'N' Street, Suite 400, The Atrium
PO Box 98922
Lincoln, NE 68509-8922
Tel. 402/471-4220
Fax 402/471-2909

PCE - Physical Examination Characteristic Examination Report

This form may be used to record observations of the physical characteristics of water discharges as required on some NPDES permit. The use of this form is generally not required by NPDES permits. Therefore an alternative report form containing the same information may be used.

Project/Facility Name: _____

Date and Time of Observation: _____

Name of Observer: _____

Parameter	Observations
Turbidity	
Color	
Odor	
Petroleum or Hydrocarbons Present	
Sheens or Films	
Foam or Foaming Below Discharge	
Floating Solids	
Off-Gassing	

Record any other observations or additional information: _____

_____

_____

Is there evidence or potential evidence of excessive pollution as defined in the PCE procedure:_____

_____

_____

Nebraska Department of Environmental Quality
Wastewater Section

1200 'N' Street, Suite 400, The Atrium
PO Box 98922
Lincoln, NE 68509-8922
Tel. 402/471-4220
Fax 402/471-2909

NCR Non-Compliance Report Instructions

The Non-Compliance Report form needs to be submitted within 5 days of becoming aware of any permit violation. In addition, an oral report of the violation needs to be made within 24 hours of becoming aware of a permit violation. Other reporting requirements may also apply; see the Reporting Requirements and Standard Conditions in your NPDES permit for more details.

Complete the heading on the report, including: permittee or facility name, NPDES permits number, outfall number, and the date(s) on which sampling was conducted.

In the left column, list the parameter(s) for which the noncompliance(s) occurred. In the columns to the right, provide the requested information on the monitoring values found, the permit limits, their units and the frequency of analysis, and the sample type (e.g., grab or 24 hour composite). Be sure to provide the flow data requested in the last row, as well.

Also provide on the form or in an attachment (e.g., a laboratory report) monitoring information on the other parameters tested at the same time or over the same time period.

Provide an explanation of what caused the non-compliance, and what actions were taken to correct and to prevent a reoccurrence of the non-compliance. If necessary, provide additional information on the nature of the violation, the exact time frame over which it occurred, and any impacts that were observed in the receiving stream. Attachments may be used as needed.

The Certifying Official or Authorized Representative, who meet the following qualifications, must sign the form.

The "Certifying Official", who meets the requirements set forth in NDEQ Title 119, Chapter 13 002 is responsible for signing all permit applications. "All permit applications submitted to the Department shall be signed:

002.01 – For a corporation by a responsible corporate officer;

002.02 - For a partnership or in a sole proprietorship by a general partner or the proprietor; and

002.03 - For a municipal, State, Federal; or other public facility by either a principal executive officer or ranking elected official."

The qualifications and responsibilities for the "authorized representative" are set forth in NDEQ Title 119 Chapter 13 003. All other correspondence, reports and DW-DMR's shall be signed by a person designated in 002.01 through 002.03 or a duly authorized representative if such representative is responsible for the overall operation of the facility from which the discharge originates; the authorization is made in writing by the person designated under 002.01 through 002.03 and the written authorization is submitted to the Director. The authorized representative may also sign DW-NOIs, if the Owner/Operator has specifically authorized them to perform this task in a previous DW-NOI or in other written documentation as set forth in permit Section C.2.g.

Return the completed form to one of the following addresses:

US Postal Service Address

Wastewater Section
Nebraska Department of Environmental Quality
PO Box 98922
Lincoln, NE 68509-8922

Alternate Carrier Address

Wastewater Section
Nebraska Department of Environmental Quality
The Atrium, 1200 N Street, Suite 400
Lincoln, NE 68509

Nebraska Department of Environmental Quality

Wastewater Section

1200 'N' Street, Suite 400, The Atrium
PO Box 98922
Lincoln, NE 68509-8922
Tel. 402/471-4220
Fax 402/471-2909

NCR Non-Compliance Report

This non-compliance form needs to be submitted within 5 days of becoming aware of any permit violation. In addition, an oral report of the violation needs to be made within 24 hours of becoming aware of a permit violation. Other reporting requirements may also apply; see Appendix A, Section D of your permit for more details.

Facility Name: _____

Facility Location: _____

NPDES Tracking Number: NEG671 ____ ____ ____ Outfall Number: _____

Parameter	**Date(s) Monitored**	**Type of Limitation: Minimum, Average or Maximum**	**Permit Limit (Include Units e.g., mg/L or kg/day)**	**Test Result (Include Units e.g., mg/L or kg/day)**	**Flow (MGD) or Volume (gallons)**

Provide an explanation of what caused the non-compliance and what actions were taken to correct and to prevent a reoccurrence the non-compliance. If necessary, provide additional information on the nature of the violation, the exact time frame over which it occurred, and any impacts that were observed in the receiving stream. Attachments may be used as needed.

_____

_____

_____

_____

_____

_____

_____

_____

_____

_____

_____

Certification: I certify that I am familiar with the information in this report and that to the best of my knowledge and belief this report is true, complete and accurate.

_____ _____

Signature of Certifying Official or Authorized Representative* Date

_____

Printed Name of Signatory

The "Certifying Official", who meets the requirements set forth in NDEQ Title 119, Chapter 13 002 is responsible for signing all permit applications. "All permit applications submitted to the Department shall be signed:

002.01 – For a corporation by a responsible corporate officer;
002.02 - For a partnership or in a sole proprietorship by a general partner or the proprietor; and
002.03 - For a municipal, State, Federal, or other public facility by either a principal executive officer or ranking elected official."

The qualifications and responsibilities for the "authorized representative" are set forth in NDEQ Title 119 Chapter 13 003. All other correspondence, reports and DW-DMR's shall be signed by a person designated in 002.01 through 002.03 or a duly authorized representative if such representative is responsible for the overall operation of the facility from which the discharge originates; the authorization is made in writing by the person designated under 002.01 through 002.03 and the written authorization is submitted to the Director. The authorized representative may also sign DW-NOIs, if the Owner/Operator has specifically authorized them to perform this task in a previous DW-NOI or in other written documentation as set forth in permit Section C.2.g.

Nebraska Department of Environmental Quality
Wastewater Section

1200 'N' Street, Suite 400, The Atrium
PO Box 98922
Lincoln, NE 68509-8922
Tel. 402/471-4220
Fax 402/471-2909

DW-RLN Dewatering Discharges Relocation Notice
Authorized Under NPDES General Permit NEG671000 2017

This form is intended for use by facilities subject to NPDES General Permit for Dewatering Discharges. The second page of this form contains sections that apply specifically to this NPDES program.

Questions concerning the completion of this form should be directed to Wastewater Section at 402/471-4220.

1. **Certifying Official Identification**

   Certifying Official: _____

   Title: _____

   Address: _____

   Telephone Number: _____Email:_____

2. **Authorization Number NEG671 ____ ____ _____ _____**

3. **Facility Identification**
   Facility Name: _____

   SIC Code: _____ Facility Type: _____

4. **Relocation Site**
   Street Address or brief narrative description of the facility location (not the mail address):

   _____

   _____

5. **Legal Description:**

   _____ Quarter of the _____ Quarter of Section _____, Township _____N, Range _____(E or W)

   County _____

6. **Relocation Schedule** – Provide the anticipated dates for the following:

   Start Date: _____

   Stop Date: _____

7. Receiving Waters:

Name of receiving water of the dewatering water: _____

Is the receiving water identified in Appendix B of the NPDES permit? _____

If yes, written notification from the Department for authorization to discharge is required. No discharges are allowed to State Resource Waters. The relocation site may be denied due to the potential of water quality impacts. Additional information concerning the dewatering discharge and potential impact of the discharge on water quality may be required.

Is the dewatering water being land applied? _____

Have measures been taken to prevent soil erosion from the discharge? _____

What preventative measures were used? _____

_____

_____

8. Certification

I certify under penalty of law, that this document and all attachments were prepared under my direction or supervision in accordance with a system designed to assure that qualified personnel properly gathered and evaluated the information submitted. Based on my inquiry of the person or persons who manage the system or those persons directly responsible for gathering the information, the information submitted is, to the best of my knowledge and belief, true, accurate and complete. I am aware that there are significant penalties for submitting false information including the possibility of fine and imprisonment for knowing violations.

_____ _____

Signature of Certifying Official or Authorized Representative Date Signed

_____ _____

Printed Name Title

Submit the completed form to:

US Postal Service Address

Wastewater Section
Nebraska Department of Environmental Quality
PO Box 98922
Lincoln, NE 68509-8922

Alternate Carrier Address

Wastewater Section
Nebraska Department of Environmental Quality
The Atrium, 1200 N Street, Suite 400
Lincoln, NE 68509

Nebraska Department of Environmental Quality
Wastewater Section

1200 'N' Street, Suite 400, The Atrium
PO Box 98922
Lincoln, NE 68509-8922
Tel. 402/471-4220
Fax 402/471-2909

Fact Sheet
General NPDES Authorizing Dewatering Discharges
Entire State of Nebraska
NPDES NEG671000 2017

TABLE OF CONTENTS

A. APPLICABILITY 2
B. AUTHORITY AND PURPOSE 2
C. DESCRIPTION OF THE DISCHARGES 2
D. AREA OF APPLICATION 2
E. PERMIT TERM 3
F. PROPOSED MODIFICATION TO THE EXISTING PERMIT 3
G. PERMIT REQUIREMENTS AND CONDITIONS 3
H. SUPPORTING DOCUMENTATION 6
I. INFORMATION REQUESTS 6
J. SUBMISSION OF FORMAL COMMENTS OR REQUESTS FOR HEARING 7

A. Applicability

This general permit authorizes ground or surface water discharges from construction excavations and dewatering wells. This is a reissue without change.

B. Authority and Purpose

1. This general permit was developed according to the Nebraska Department Environmental Quality Title 119, Chapters 5 and 25 – *Rules and Regulations Pertaining to the Issuance of Permits Under the National Pollutant Discharge Elimination System*. This regulation was promulgated pursuant to the Nebraska Environmental Protection Act (Neb. Rev. Stat. §§ 81-1501 et seq.) and the Federal Clean Water Act (33 U.S.C. §§ 1251 et seq.). The National Pollutant Discharge Elimination System (NPDES) is authorized in Section 402 of the Federal Clean Water Act.
2. NPDES permits may contain effluent limitations and require "best management practices" (BMPs) in order to regulate the pollutant discharge. The permit limitations can be based upon water quality and/or technology-based standards. These standards are established in NDEQ Title 117 – *Nebraska Surface Water Quality Standards*, Title 118 – *Ground Water Standards and Use Classification*. There are no technological standards established in NDEQ Title 119, Chapter 27 that applies to the eligible sources for coverage under the General NPDES Permit NEG671000.

C. Description of the Discharges

The primary focus of this permit is to control the pollutant discharges from dewatering activities at construction excavation sites and dewatering wells used to depress ground water levels.

1. Many discharges originate from excavated pits and trenches where the primary pollutant is suspended solids. These sumps or trench discharges have a much higher potential for containing suspended solids.
2. Some discharges may originate from below ground utility vaults (electrical or telephone). Occasionally, these types of vaults are flooded by storm water runoff. These discharges have a high potential for containing petroleum hydrocarbons and suspended solids.
3. When wells are used to depress ground water levels or during foundation sump discharges, there is a low potential for containing suspended solids. However, some ground water dewatering discharges may be contaminated with various types of organic chemicals. The contamination sources are usually due to spills or leaks into ground or surface waters near the site.
4. Most ground water infiltration flows may be discharged. This permit is not limited to ground water discharges; it also addresses storm water discharges.
5. Many small volume foundation-dewatering discharges do not generally require an NPDES permit. The reason is that there is no significant discharge of pollutants to waters of the state. An individual NPDES permit authorization may be required for the following foundation dewatering activities:
   a. If ground water contamination exists;
   b. If the existing natural ground water constituents may negatively impact surface waters; or
   c. If nearby activities create pollution potential in the ground water.

D. Area of Application

This permit is applicable throughout the State of Nebraska, excluding tribal lands. Statewide application is appropriate because the potential sources may be found throughout the state. No discharges will be allowed to tribal lands within the State of Nebraska or to State Resource Waters. This permit provides specific written evaluation procedures for discharges to the following waters of the state:

1. Stream segments that are protected as Public Drinking Water Supplies.

These requirements are set forth in the permit Part I. These provisions provide the Department an opportunity to evaluate the discharge based on receiving water criteria. These water quality evaluations can be made on any given dewatering discharge with the state.

E. Permit Term

This permit is to be issued for a five-year term. This is the maximum time period allowed pursuant to NDEQ Title 119, Chapter 16 002. Within the permit in Appendix A. Paragraph A.7 sets forth a reopener clause that allows modification, suspension, revocation, or reissuance according to NDEQ Title 119, Chapter 24.

F. Proposed Changes to the Existing Permit

On the basis of a preliminary staff review, the Nebraska Department of Environmental Quality has made a tentative determination to reissue the permit without change.

G. Permit Requirements and Conditions

The content of each section is summarized in the following paragraphs. An explanation of the basis is provided when appropriate. The draft permit consists of authorization page, four main parts, two appendices, and six attachments. The six attachments are the Notice of Intent (DW-NOI), the Threatened and Endangered Species Checklist, the Discharge Monitoring Report (DW-DMR), the noncompliance report form, a physical characteristics examination (PCE) report, and a dewatering relocation notice (DW-RLN). These attached forms are subject to modification by the Department.

1. Permit Authorization Page

This is the first permit page. It identifies the permit name, number, issuance and expiration dates, and the Federal and State laws that authorize this NPDES permit. The Director or a delegated representative shall sign this page prior to permit issuance.

2. Table of Contents

This is a summary of the Parts, Sections, Appendices, and Attachments of the draft permit. This is intended as an aid for using and reviewing the permit.

3. Part I - Eligibility

The area of the state to which the permit applies is identified (i.e. this permit has statewide application). This part describes the discharges that are eligible to apply for authorization to discharge under the terms and conditions of this permit. Several limitations on coverage are also set forth in this part of permit.

4. Part II - Authorization to Discharge

This part set forth the following procedures:

1. How to obtain authorization;
2. Contents of the Notice of Intent;
3. Additional Information Requirements;
4. Requiring an alternative permit application;
5. Revocation of the authorization to discharge;
6. Notification of changes to facility name, ownership, operations, or pertinent personnel;
7. Notification of any activities that may alter the water quality of the discharge; and
8. Notification of Relocation or Completion.

Any facility wishing authorization to discharge under the terms and conditions of this general permit must submit a Notice of Intent (DW-NOI). The permit specifies minimum and additional information requirements for potential applicants. This permit section specifically spells out what is required in a DW-NOI. It also contains information that may aid applicants in completing and submitting the DW-NOI.

When the Department has received the complete DW-NOI, the discharge authorization shall be granted after 10 days. However, there are the following exceptions:

1) If additional information is requested, or;
2) If the discharge is to public drinking water sources, then the review period is extended.

5. Part III Monitoring Requirements and Effluent Limitations

a. Table A – Construction Excavation Site Dewatering Effluent Limitations and Monitoring Requirement establishes the following parameters, limitations and monitoring requirements:

1) Monitoring shall be initiated within 8 hours after the discharge is started;
2) Flow shall be monitored daily;
3) The physical characteristics examination shall be conducted daily;
4) Petroleum hydrocarbons shall be sampled and analyzed when a visible hydrocarbon sheen or free petroleum product is detected;
5) The total suspended solids haves a daily maximum limitation of 90 mg/L. The maximum limitation of 90 mg/L for total suspended solids limitation was originally a “best professional judgment” limitation. The existing permit compliance history indicates this limitation is an achievable limitation for excavation sites. The total suspended solids parameter shall be sampled and analyzed on a weekly frequency;
6) The pH parameter shall be sampled and analyzed on a weekly frequency. The pH range 6.5 to 9.0 limitation was adopted from NDEQ Title 117, Chapter 4. The compliance history of the existing permit indicates this is achievable limitation;
7) The Department may request a onetime sampling analysis for metals as well as organics; and
8) To qualify for the monitoring frequency reduction, the permittee must employ best management practices and demonstrate compliance with the permit limitations. This must be demonstrated for a 30 days.

b. Table B – Foundation Sump, Utility Vault, and Ground Water Level Depression Dewatering Effluent Limitations and Monitoring Requirement establishes the following parameters, limitations and monitoring requirements:

1) Monitoring shall be initiated within 8 hours after the discharge is started;
2) Flow shall be monitored daily;
3) The physical characteristics examination shall be conducted daily;
4) Petroleum hydrocarbons shall be sampled and analyzed when a visible hydrocarbon sheen or free petroleum product is detected;
5) The total suspended solids haves a daily maximum limitation of 30 mg/L. The maximum limitation of 30 mg/L for total suspended solids limitation was originally a “best professional judgment” limitation. The existing permit compliance history indicates this limitation is an achievable limitation for foundation sump, utility vault, and ground water level depression sites. The total suspended solids parameter shall be sampled and analyzed on a weekly frequency;
6) The pH parameter shall be sampled and analyzed on a monthly frequency. The pH range 6.5 to 9.0 limitation was adopted from NDEQ Title 117, Chapter 4. The compliance history of the existing permit indicates this is achievable limitation;
7) The Department may request a onetime sample analysis for metals as well as organics; and
8) To qualify for the monitoring frequency reduction, the permittee must employ best management practices and demonstrate compliance with the permit limitations. This must be demonstrated for a one-week period.

c. Site Specific Conditions establishes that a parameter may be added on a case-by-case basis based on water quality standards.

d. One-time sampling analysis for Metals establishes that if the Department believes that metals may be present in the discharge, a one-time sample shall be analyzed to determine of additional monitoring will be required.

e. One-time sampling analysis for Organics establishes that if the Department believes that organics may be present in the discharge, a one-time sample shall be analyzed to determine of additional monitoring will be required.

f. Land Application/Beneficial Reuse establishes narrative requirements for permittees wishing to either reuse the water for a beneficial purpose, or for land application in situations where the permittee may have no option for a direct discharge, wishes to use the discharge water in a beneficial manner, or where water quality standards would not be met with a direct discharge. These narrative requirements were taken from Nebraska Title 119, Chapter 12.

6. Part IV. - Other Conditions and Requirements

This part of the permit contains the following provisions:

a. A disclaimer stating that compliance with the permit does not provide a liability shield from any environmental damage that might result from discharges authorized under this permit;

b. A narrative water quality based limitation on toxicity developed pursuant to NDEQ Title 117;

c. A narrative water quality based limitations on films, color, turbidity, deposition, and noxious odor pursuant to NDEQ Title 117;

d. A requirement to immediately report conditions or events that may be indicative or related to the introduction of pollution in the discharge;

e. Reduction in monitoring frequency – These provisions allow the permittee to reduce the monitoring frequency for extended periods of dewatering. The reduction in monitoring frequency will be granted upon the receipt of the permittee's written request and compliance with permit provisions.

f. A requirement to control erosion and channel scouring that could potentially occur as a result of the discharge;

g. An allowance is made for modification of the DW-NOI, DW-DMR, noncompliance report, and the DW-PCE report forms. These forms are attachments to the permit. This provides the permittee with notification and reporting forms to meet the requirements of the permit. This provision allows the Department the flexibility to improve these forms

h. Additional monitoring parameters may be added to this permit, when special site-specific conditions arise during the dewater operations. (e.g., During the dewatering process, an effluent pollutant causes a water quality impact not identified in the Notice of Intent.)

i. On October 22, 2015, EPA published the Clean Water Act National Pollutant Discharge Elimination System (NPDES) Electronic Reporting Rule, which requires electronic reporting of NPDES information rather than the currently required paper based reports from the permitted facilities. Facilities must submit electronically information required in Appendix A of 40 CFR Part 127, 40 CFR 122.26(b)(15), and 40 CFR 122.26(b)(14)(x).

7. Appendix A – Standard Conditions

This appendix contains the conditions and requirements that are common to all NPDES permits issued by the Department. These conditions and requirements are based on State and Federal regulatory requirements that pertain to NPDES permits.

8. Appendix B – State Resource Waters and Public Drinking Water Supply Streams

This appendix identifies stream segments which are considered State Resource Waters or Public Drinking Supply Streams. It is intended as a reference to the applicants and permittees for use in filling out NOI and Relocation Notices. Information in this appendix is arranged by county to make it easier for permittees to use.

9. Attachments

The following forms are included as attachments to this permit:

a. DW-NOI - Notice of Intent;
b. DW-DMR – Discharge Monitoring Report
c. Threatened and Endangered Species Checklist
d. PCE - Physical Characteristics Examination Report with instructions;
e. Noncompliance Report with instructions; and
f. DW–RLN – Dewatering Site Relocation Notice.

These forms may be modified according to the "Other Requirements" part of this permit.

H. Supporting Documentation

1. NDEQ Title 117 - *Nebraska Surface Water Quality Standards* (Revised December 13, 2014);
2. NDEQ Title 118 - *Ground Water Quality Standards and Use Classifications* (Revised March 26, 2006);
3. NDEQ Title 119 - *Rules and Regulations Pertaining to the Issuance of Permits under the National Pollutant Discharge Elimination System* (Revised May 16, 2005);
4. USEPA *Technical Support Document for Water Quality-based Toxic Control* (EPA 505/2-90-001 PB91-127415, March, 1991);
5. NDEQ *NPDES Permitting Procedure* document;
6. 40 CFR, Part 122, 124, and 125, NPDES Regulations; and
7. Nebraska Non-game and Endangered Species Conservation Act (Neb. Rev. Stat. §§ 37-430 through 317 – 438);

I. Information Requests

Inquiries concerning the draft permit, its basis or the public comment process may be directed to:

Lisa Giesbrecht, NPDES Permits Unit Tel. 402/471-8830 or 402/471-4220 Fax: 402/471-2909

Individuals requiring special accommodations or alternate formats of materials should notify the Department by calling (402) 471-2186. TDD users should call (800) 833-7352 and ask the relay operator to call the Department at (402) 471-2186.

Copies of the application and other supporting material used in the development of the permit are available for review and copying at the Department's office between 8:00 a.m. and 5:00 p.m. on weekdays.

Office Location:

Nebraska Department of Environmental Quality
The Atrium, Suite 400
1200 N Street
Lincoln, NE

Mailing Address:

NPDES Permits Unit
Nebraska Department of Environmental Quality
PO Box 98922
Lincoln, Nebraska 68509-8922

J. Submission of Formal Comments or Requests for Hearing

The date on which the public notice period ends is specified in the public notice. During the public notice period, the public may submit formal comments or objections, and/or petition the Department to hold a public hearing concerning the issuance of the draft permit. All such requests need to: be submitted in written form, state the nature of the issues to be raised, and present arguments and factual grounds to support them. The Department shall consider all written comments, objections and/or hearing petitions, received during public comment period, in making a final decision regarding permit issuance.

Formal comments, objections and/or hearing requests need to be submitted to:

Lisa Giesbrecht, NPDES Permits Unit

Location Address

Nebraska Department of Environmental Quality
The Atrium, Suite 400
1200 N Street
Lincoln, Nebraska

Mailing Address:

Nebraska Department of Environmental Quality
P.O. Box 98922
Lincoln, Nebraska 68509-8922

CITY OF
GRAND ISLAND
UTILITIES DEPARTMENT

Water Main
Standard Plans

CURRENT REVISION: JANUARY 27, 2020

CITY OF GRAND ISLAND

UTILITIES DEPARTMENT

Water Main Standard Plans Index

PLAN 133	PIPE JOINT ENCASEMENT
PLAN 134	CONCRETE THRUST BLOCKING
PLAN 135	WATER VALVE MANHOLE FOR 8" OR SMALLER VALVES
PLAN 136	WATER VALVE MANHOLE FOR 10” OR LARGER VALVES
PLAN 138	SEWER - WATER MAIN CROSSING DETAILS
PLAN 140	FIRE HYDRANT INSTALLATIONS
PLAN 141	CARRIER PIPE AND ENCASEMENT
PLAN 142	WATER MAIN TESTING & SAMPLING TAP
PLAN 143	BELL JOINT BLOCK
PLAN 152	WATER SERVICE LINE INSTALLATIONS
PLAN 155	POLYETHYLENE ENCASEMENT
PLAN 156	IN-LINE “I” BEAM BLOCK
PLAN 157	WATER METER AND BACKFLOW PREVENTER INSTALLATIONS
PLAN 158	FIRE HYDRANT ON DEAD-END USING RESTRAINED JOINTS
PLAN 159	FIRE HYDRANT ON DEAD-END USING CONCRETE BLOCKING
PLAN 160	FIRE HYDRANT BOLLARD PROTECTION
PLAN 161	5/8", 3/4" AND 1" WATER METER INSTALLATION
PLAN 162	1-1/2" AND LARGER WATER METER INSTALLATION

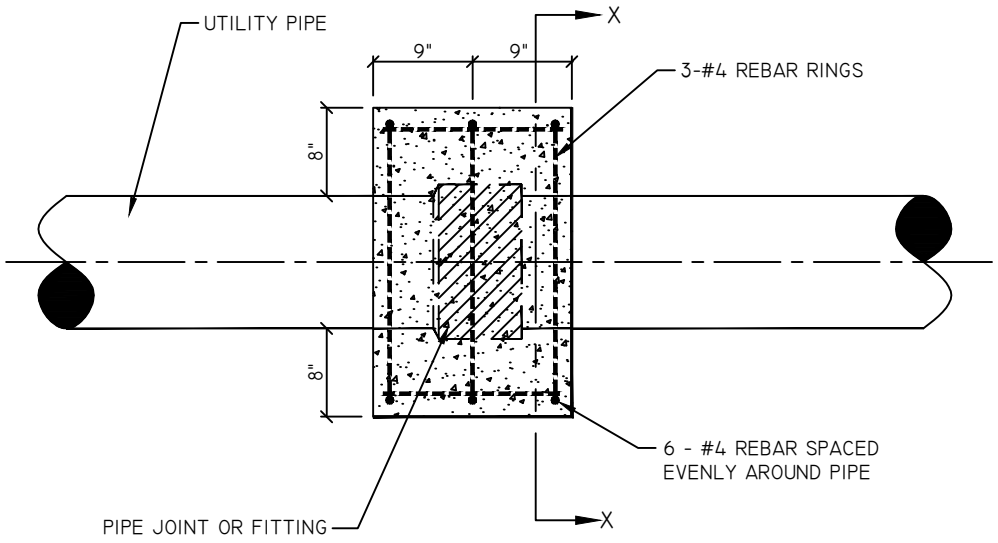

PLAN VIEW

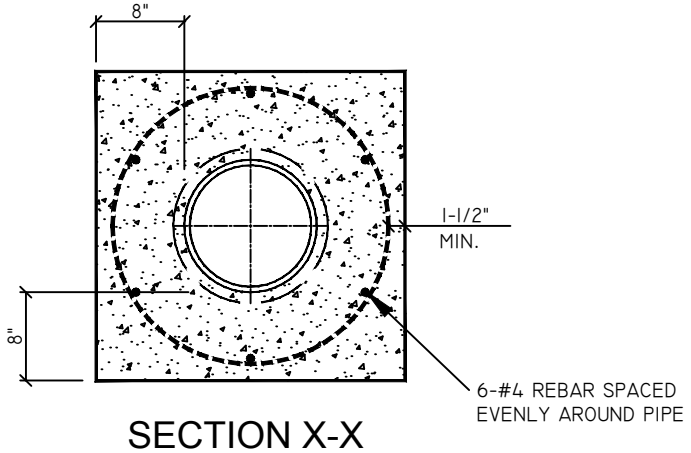

SECTION X-X

NOTES :

1. ALL JOINT ENCASEMENTS TO BE TYPE 47-B MODIFIED POURED CONCRETE AS PER DIVISION II; "CONCRETE PAVING SPECIFICATIONS"

THIS DOCUMENT WAS ORIGINALLY SEALED AND ISSUED BY RYAN L. SCHMITZ E-13818, ON 1-15-2019. THIS MEDIA SHOULD NOT BE CONSIDERED A CERTIFIED DOCUMENT AND SHOULD BE USED FOR REFERENCE ONLY.

RYAN L. SCHMITZ E-13818 REGISTERED PROFESSIONAL ENGINEER STATE OF NEBRASKA

CITY OF GRAND ISLAND UTILITIES DEPARTMENT	REVISED: 1/03/2019 DRAWN BY: TDZ CHECKED BY: R.L.S.	JOINT ENCASEMENT	PLAN 133

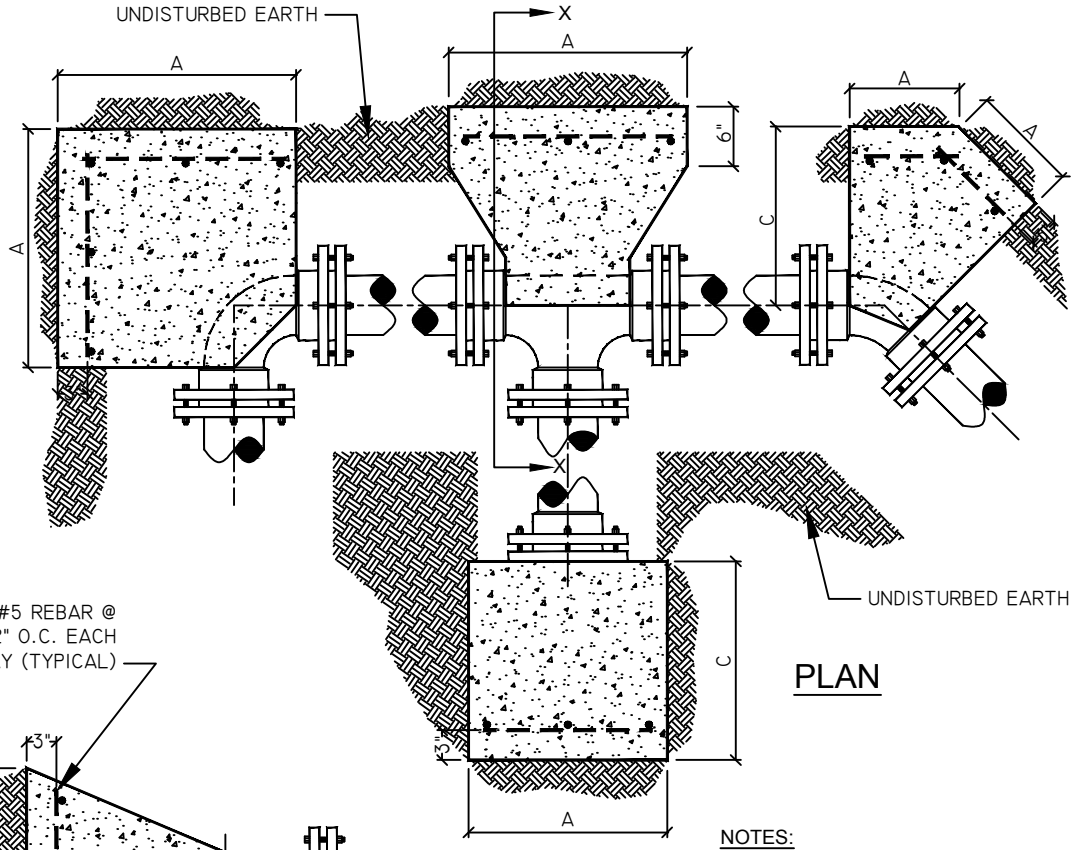

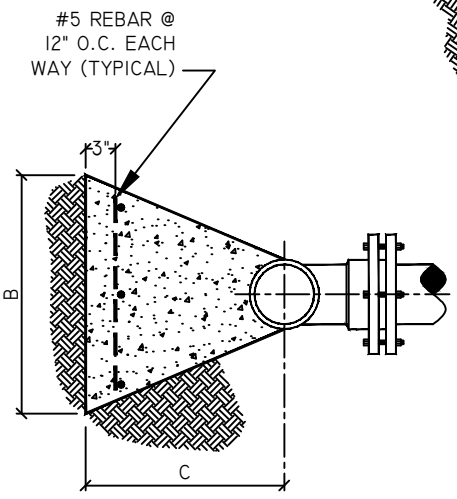

SECTION X-X

NOTES:

* FOR THRUST BLOCKS DIMENSIONS SEE TABLE ON STANDARD PLAN 134, SHEET 5

NOTES:

1. ALL THRUST BLOCKS TO BE TYPE 47-B MODIFIED POURED CONCRETE AS PER DIVISION II; "CONCRETE PAVING SPECIFICATIONS"; AND DIVISION VI "WATER MAINS".
2. ALL CONCRETE BLOCKING SHALL BE INSTALLED IN SUCH A MANNER THAT ALL PIPE AND FITTING JOINTS ARE ACCESSIBLE.
3. ALL FITTINGS ARE TO BE WRAPPED IN 8 MIL POLYETHYLENE.
4. ALL THRUST BLOCKS ARE TO BE POURED AGAINST UNDISTURBED SOIL.
5. IF SOIL OTHER THAN SANDY SOIL IS DISCOVERED DURING EXCAVATION, THE THRUST BLOCK SIZE SHALL BE VERIFIED BY THE ENGINEER.
6. TAPPING SLEEVES SHALL BE TREATED AS A TEE AND BLOCKED ACCORDINGLY

THIS DOCUMENT WAS ORIGINALLY SEALED AND ISSUED BY RYAN L. SCHMITZ E-13818, ON 1-15-2019. THIS MEDIA SHOULD NOT BE CONSIDERED A CERTIFIED DOCUMENT AND SHOULD BE USED FOR REFERENCE ONLY.
PROFESSIONAL ENGINEER
RYAN L. SCHMITZ
E-13818
STATE OF NEBRASKA

CITY OF GRAND ISLAND UTILITIES DEPARTMENT	REVISED: 1/03/2019 DRAWN BY: TDZ CHECKED BY: R.L.S.	CONCRETE BLOCKING FOR FITTINGS HORIZONTAL BLOCKING	PLAN 134 1 of 6

* FOR THRUST BLOCKS DIMENSIONS SEE TABLE ON STANDARD PLAN 134, SHEET 5

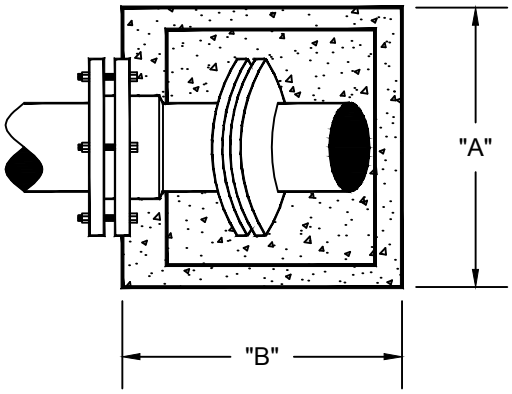

DETAIL "B"
NO SCALE

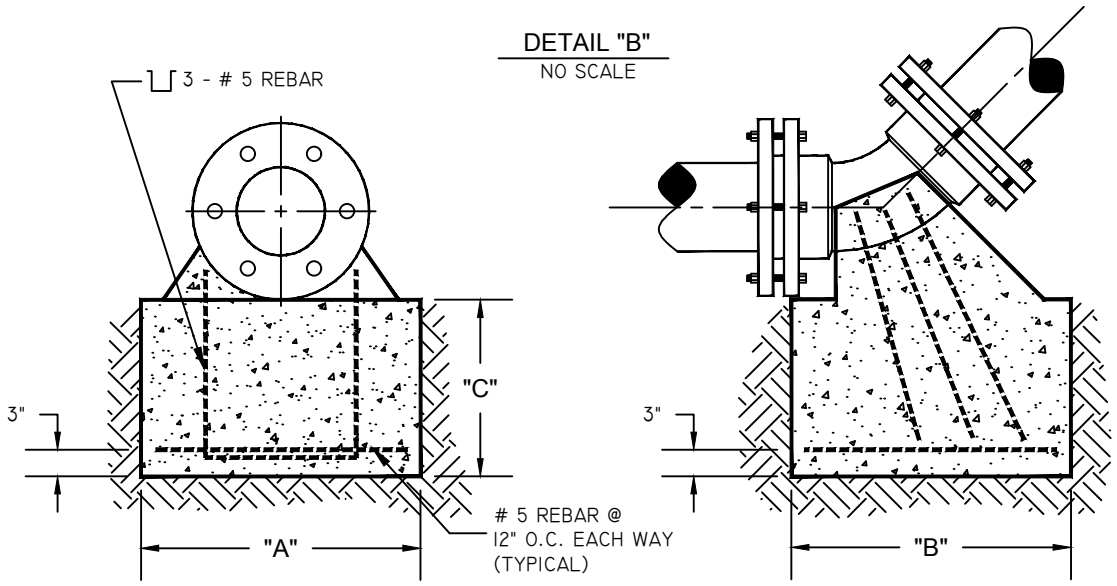

NOTES :

1. ALL THRUST BLOCKS TO BE TYPE 47-B MODIFIED POURED CONCRETE AS PER DIVISION II; "CONCRETE PAVING SPECIFICATIONS"; AND DIVISION VI "WATER MAINS".
2. ALL CONCRETE BLOCKING SHALL BE INSTALLED IN SUCH A MANNER THAT ALL PIPE AND FITTING JOINTS ARE ACCESSIBLE.
3. ALL FITTINGS ARE TO BE WRAPPED IN 8 MIL POLYETHYLENE.
4. ALL THRUST BLOCKS ARE TO BE POURED AGAINST UNDISTURBED SOIL.
5. ALL REINFORCING STEEL SHALL BE DEFORMED BARS CONFORMING TO A.S.T.M. A-305-507 AND SATISFY THE BENT TEST REQUIREMENTS FOR STRUCTURAL GRADE STEEL.
6. IF SOIL OTHER THAN SANDY SOIL IS DISCOVERED DURING EXCAVATION, THE THRUST BLOCK SIZE SHALL BE VERIFIED BY THE ENGINEER.

THIS DOCUMENT WAS ORIGINALLY SEALED AND ISSUED BY RYAN L. SCHMITZ E-13818, ON 1-15-2019. THIS MEDIA SHOULD NOT BE CONSIDERED A CERTIFIED DOCUMENT AND SHOULD BE USED FOR REFERENCE ONLY.

REGISTERED PROFESSIONAL ENGINEER
RYAN L. SCHMITZ
E-13818
STATE OF NEBRASKA

CITY OF GRAND ISLAND UTILITIES DEPARTMENT	REVISED: 1/03/2019 DRAWN BY: TDZ CHECKED BY: R.L.S.	CONCRETE BLOCKING FOR FITTINGS VERTICAL UP BLOCKS	PLAN 134 2 of 6

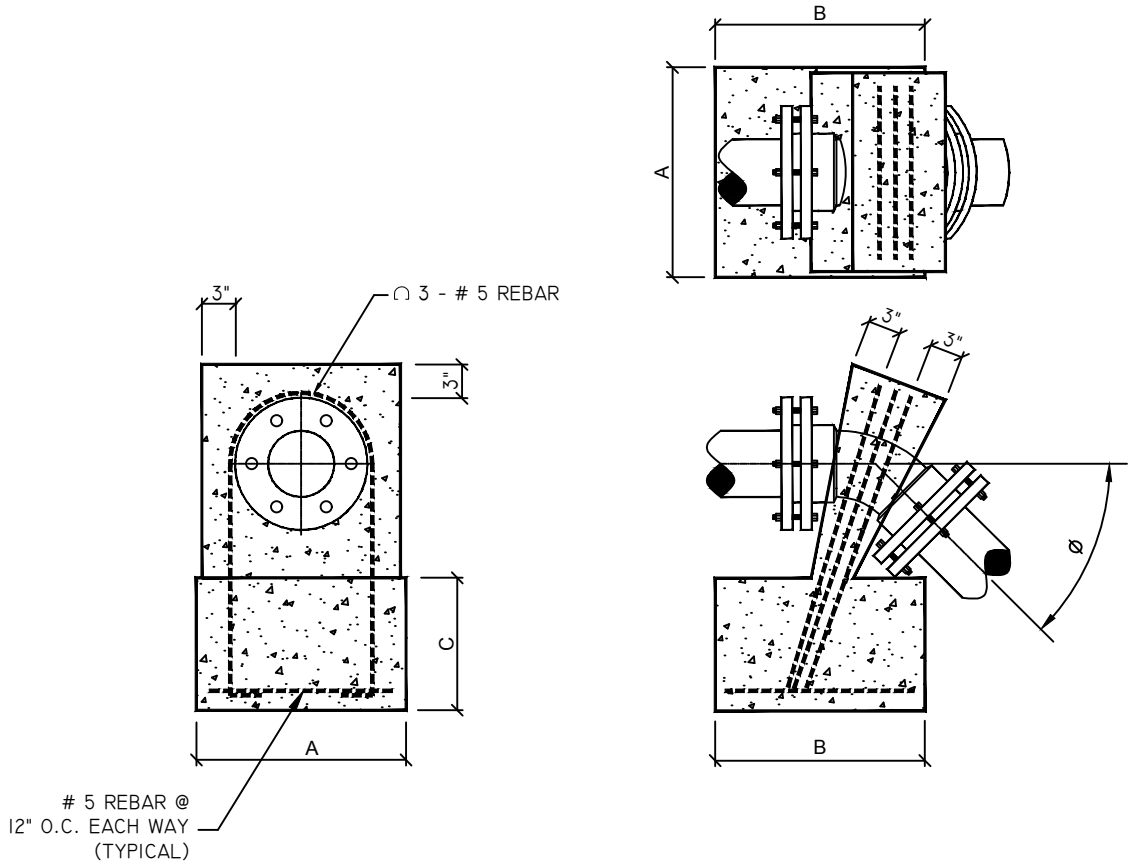

* FOR THRUST BLOCKS DIMENSIONS SEE TABLE ON STANDARD PLAN 134, SHEET 5

NOTES :

1. ALL THRUST BLOCKS TO BE TYPE 47-B MODIFIED POURED CONCRETE AS PER DIVISION II; "CONCRETE PAVING SPECIFICATIONS"; AND DIVISION VI "WATER MAINS".
2. ALL CONCRETE BLOCKING SHALL BE INSTALLED IN SUCH A MANNER THAT ALL PIPE AND FITTING JOINTS ARE ACCESSIBLE.
3. ALL FITTINGS ARE TO BE WRAPPED IN 8 MIL POLYETHYLENE.
4. ALL THRUST BLOCKS ARE TO BE POURED AGAINST UNDISTURBED SOIL.
5. ALL REINFORCING STEEL SHALL BE DEFORMED BARS CONFORMING TO A.S.T.M. A-305-507 AND SATISFY THE BENT TEST REQUIREMENTS FOR STRUCTURAL GRADE STEEL.
6. IF SOIL OTHER THAN SANDY SOIL IS DISCOVERED DURING EXCAVATION, THE THRUST BLOCK SIZE SHALL BE VERIFIED BY THE ENGINEER.

THIS DOCUMENT WAS ORIGINALLY SEALED AND ISSUED BY RYAN L. SCHMITZ E-13818, ON 1-15-2019. THIS MEDIA SHOULD NOT BE CONSIDERED A CERTIFIED DOCUMENT AND SHOULD BE USED FOR REFERENCE ONLY.
RYAN L. SCHMITZ E-13818
REGISTERED PROFESSIONAL ENGINEER
STATE OF NEBRASKA

CITY OF GRAND ISLAND UTILITIES DEPARTMENT	REVISED: 1/03/2019 DRAWN BY: TDZ CHECKED BY: R.L.S.	CONCRETE BLOCKING FOR FITTINGS 4"-10" GRAVITY BLOCKS	PLAN 134 3 of 6

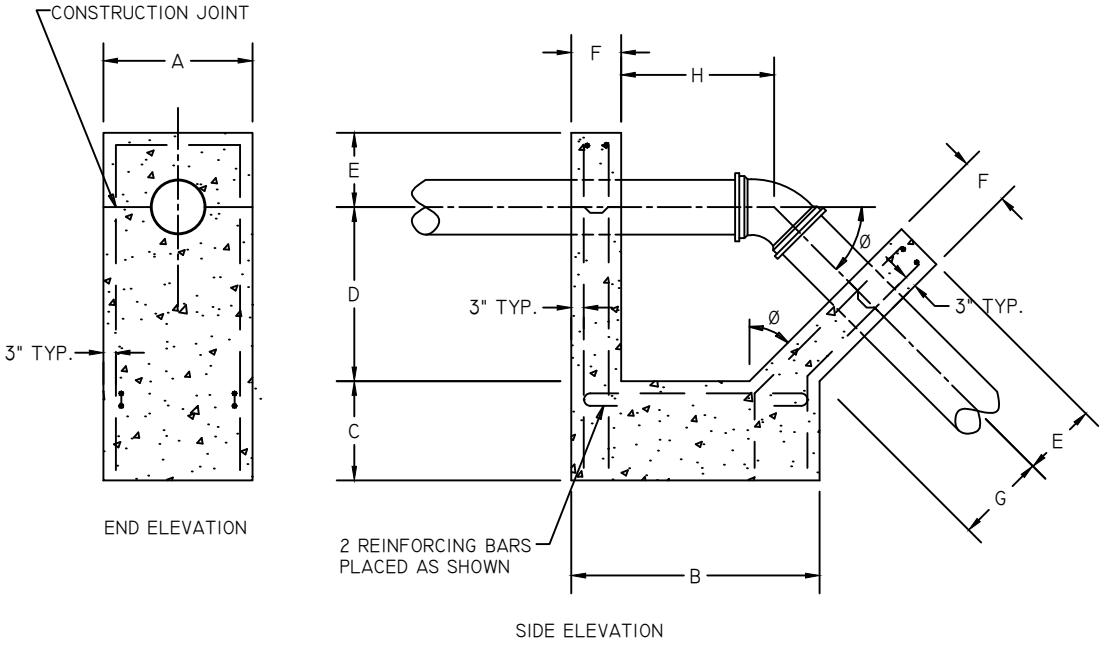

* FOR THRUST BLOCKS DIMENSIONS SEE TABLE ON STANDARD PLAN 134, SHEET 5

NOTES :

1. ALL THRUST BLOCKS TO BE TYPE 47-B MODIFIED POURED CONCRETE AS PER DIVISION II; "CONCRETE PAVING SPECIFICATIONS"; AND DIVISION VI "WATER MAINS".
2. ALL CONCRETE BLOCKING SHALL BE INSTALLED IN SUCH A MANNER THAT ALL PIPE AND FITTING JOINTS ARE ACCESSIBLE.
3. ALL FITTINGS ARE TO BE WRAPPED IN 8 MIL POLYETHYLENE.
4. ALL THRUST BLOCKS ARE TO BE POURED AGAINST UNDISTURBED SOIL.
5. ALL REINFORCING STEEL SHALL BE DEFORMED BARS CONFORMING TO A.S.T.M. A-305-507 AND SATISFY THE BENT TEST REQUIREMENTS FOR STRUCTURAL GRADE STEEL.
6. IF SOIL OTHER THAN SANDY SOIL IS DISCOVERED DURING EXCAVATION, THE THRUST BLOCK SIZE SHALL BE VERIFIED BY THE ENGINEER.

THIS DOCUMENT WAS ORIGINALLY SEALED AND ISSUED BY RYAN L. SCHMITZ E-13818, ON 1-15-2019. THIS MEDIA SHOULD NOT BE CONSIDERED A CERTIFIED DOCUMENT AND SHOULD BE USED FOR REFERENCE ONLY.
PROFESSIONAL ENGINEER
RYAN L. SCHMITZ
E-13818
STATE OF NEBRASKA

CITY OF GRAND ISLAND UTILITIES DEPARTMENT	REVISED: 1/03/2019 DRAWN BY: TDZ CHECKED BY: R.L.S.	CONCRETE BLOCKING FOR FITTINGS 12"-24" GRAVITY BLOCKS	PLAN 134 4 of 6

HORIZONTAL AND VERTICAL UP BLOCK DIMENSIONS
DESIGN PRESSURE - 200 PSI SOIL TYPE - SANDY SILT (2000 LBS/SF)

PIPE DIA.	TEES & PLUGS			90° BENDS			45° BENDS			22-1/2° BENDS			11-1/4° BENDS		
	A	B	C	A	B	C	A	B	C	A	B	C	A	B	C
4	16	16	18	19	19	18	14	14	18	12	12	18	12	12	18
6	23	23	20	28	28	20	20	20	20	14	14	20	12	12	20
8	30	30	22	36	36	22	27	27	22	19	19	22	13	13	22
10	37	37	24	44	44	24	33	33	24	23	23	24	17	17	24
12	44	44	26	53	53	26	39	39	26	28	28	26	20	20	26
14	51	51	29	61	61	29	45	45	29	32	32	29	23	23	29
16	59	59	31	70	70	31	51	51	31	37	37	31	26	26	31
18	66	66	33	78	78	33	57	57	33	41	41	33	29	29	33
20	73	73	36	86	86	36	64	64	36	45	45	36	32	32	36

ALL DIMENSIONS ARE IN INCHES

GRAVITY BLOCK DIMENSIONS
DESIGN PRESSURE - 200 PSI SOIL TYPE - SANDY SILT (2000 LBS/SF)

PIPE	45° BENDS									PIPE	22-1/2° BENDS								
DIA.	A	B	C	D	E	F	G	H	C.Y.	DIA.	A	B	C	D	E	F	G	H	C.Y.
4	35	35	24						0.63	4	26	26	24						0.34
6	50	50	24						1.31	6	37	37	24						0.71
8	66	66	24						2.25	8	49	49	24						1.22
10	72	72	30						3.38	10	53	53	30						1.83
12	36	80	30	24	18	12	12	21	4.78	12	36	54	30	27	18	12	15	21	2.59
14	36	94	30	27	18	12	15	27	6.42	14	36	65	30	27	18	12	15	27	3.47
16	36	108	30	33	18	12	18	33	8.30	16	36	76	30	33	18	12	18	33	4.49
18	42	121	30	36	18	12	20	37	10.43	18	42	85	30	36	18	12	20	37	5.64
20	48	135	30	36	18	12	20	37	12.80	20	48	95	30	36	18	12	20	37	6.92

ALL DIMENSIONS ARE IN INCHES (C.Y. = CUBIC YARDS OF CONCRETE REQUIRED)

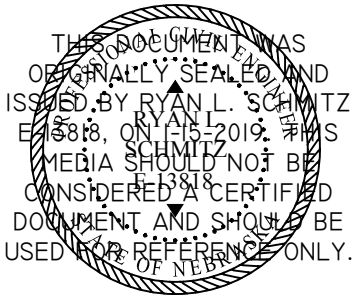

CITY OF GRAND ISLAND UTILITIES DEPARTMENT	REVISED: 1/03/2019 DRAWN BY: TDZ CHECKED BY: R.L.S.	CONCRETE BLOCKING FOR FITTINGS HORZ. & VERT. DIMENSIONS	PLAN 134 5 of 6

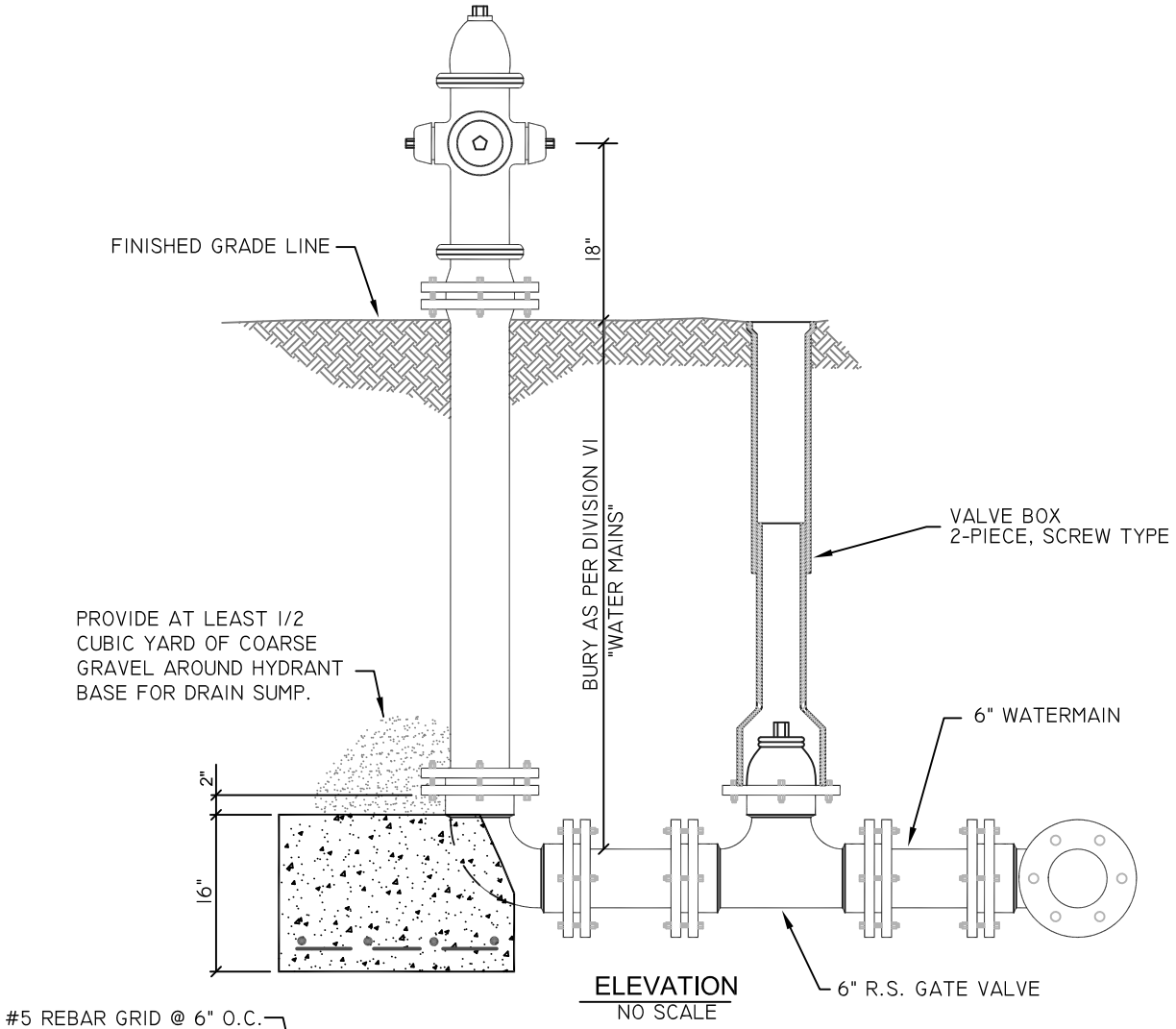

ELEVATION
NO SCALE

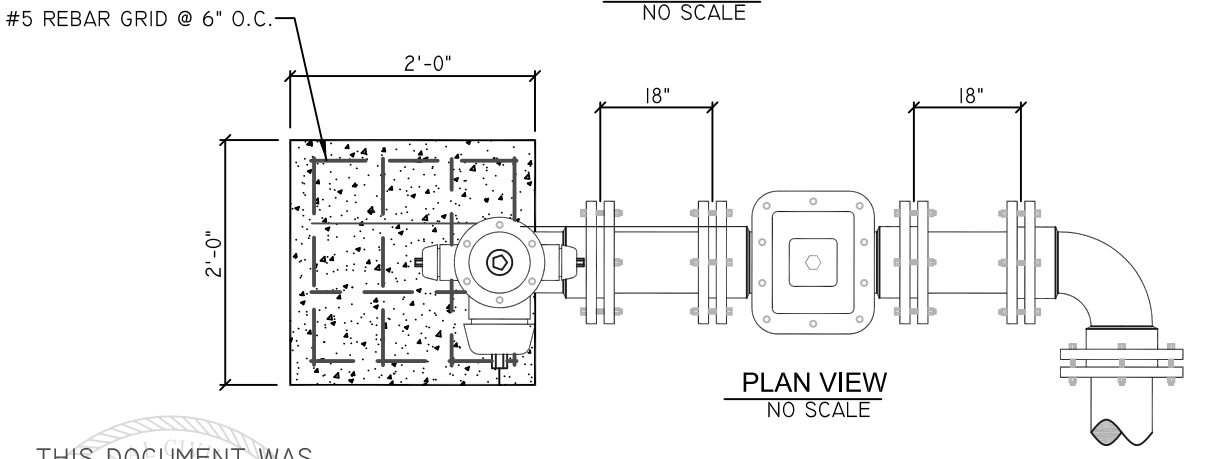

PLAN VIEW
NO SCALE

THIS DOCUMENT WAS ORIGINALLY SEALED AND ISSUED BY RYAN L. SCHMITZ E-13818, ON 1-27-2020. THIS MEDIA SHOULD NOT BE CONSIDERED A CERTIFIED DOCUMENT AND SHOULD BE USED FOR REFERENCE ONLY.

NOTES :

1. ALL THRUST BLOCKS TO BE TYPE 47-B MODIFIED POURED CONCRETE AS PER DIVISION II; "CONCRETE PAVING SPECIFICATIONS"; AND DIVISION VI "WATER MAINS".
2. ALL CONCRETE BLOCKING SHALL BE INSTALLED IN SUCH A MANNER THAT ALL PIPE AND FITTING JOINTS ARE ACCESSIBLE.
3. ALL FITTINGS ARE TO BE WRAPPED IN 8 MIL POLYETHYLENE.
4. ALL THRUST BLOCKS ARE TO BE POURED AGAINST UNDISTURBED SOIL.

CITY OF GRAND ISLAND UTILITIES DEPARTMENT	REVISED: 12/11/2019 DRAWN BY: TDZ CHECKED BY: R.L.S.	CONCRETE BLOCKING FOR FITTINGS FIRE HYDRANT BLOCKING	PLAN 134 6 of 6

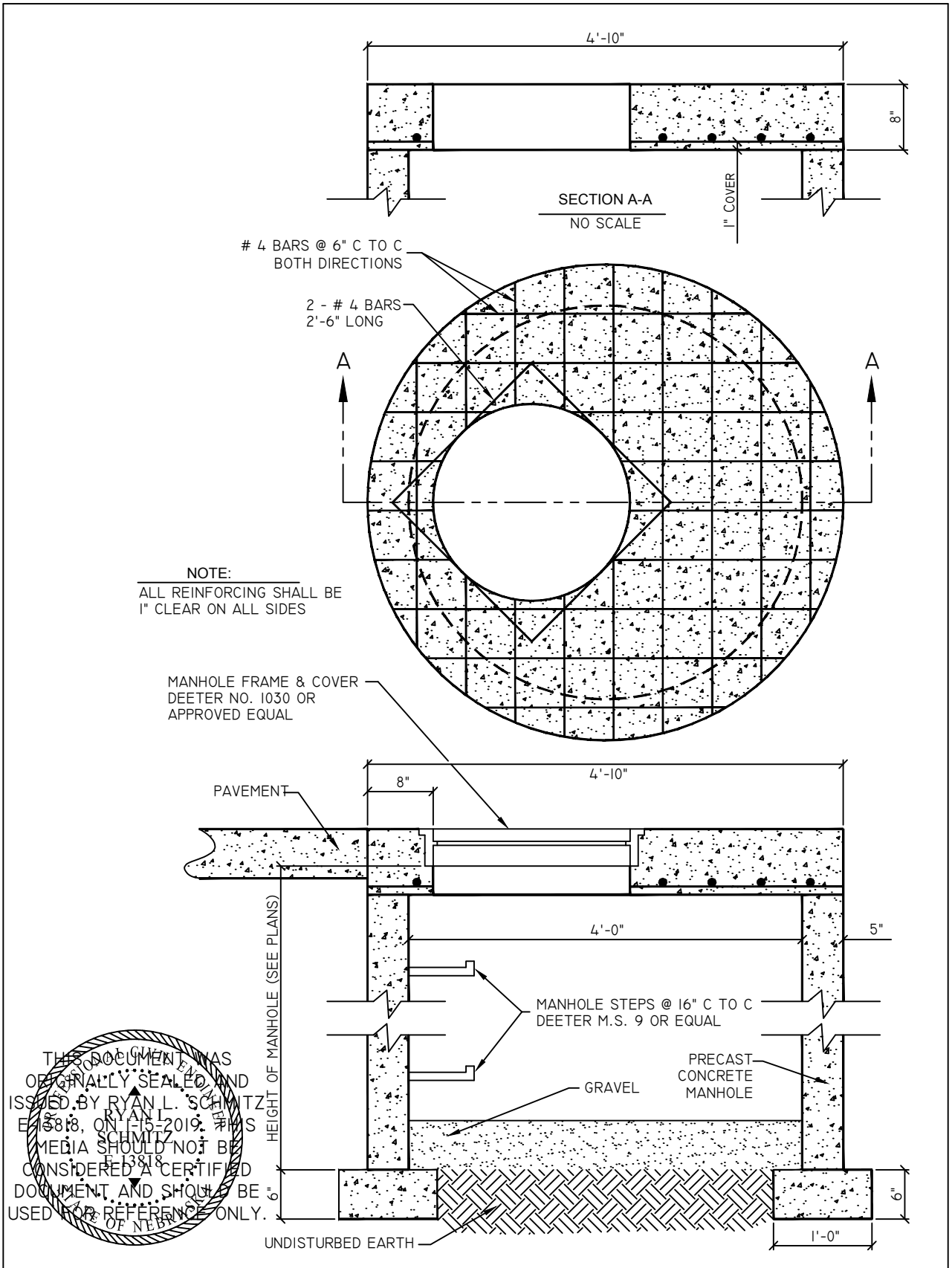

THIS DOCUMENT WAS ORIGINALLY SEALED AND ISSUED BY RYAN L. SCHMITZ E-13818, ON 1-15-2019. THIS MEDIA SHOULD NOT BE CONSIDERED A CERTIFIED DOCUMENT AND SHOULD BE USED FOR REFERENCE ONLY.
RYAN L. SCHMITZ E-13818
REGISTERED PROFESSIONAL ENGINEER
STATE OF NEBRASKA

CITY OF GRAND ISLAND UTILITIES DEPARTMENT	REVISED: 1/07/2019 DRAWN BY: TDZ CHECKED BY: R.L.S.	STANDARD WATER VALVE MANHOLE FOR 8" OR SMALLER VALVES	PLAN 135

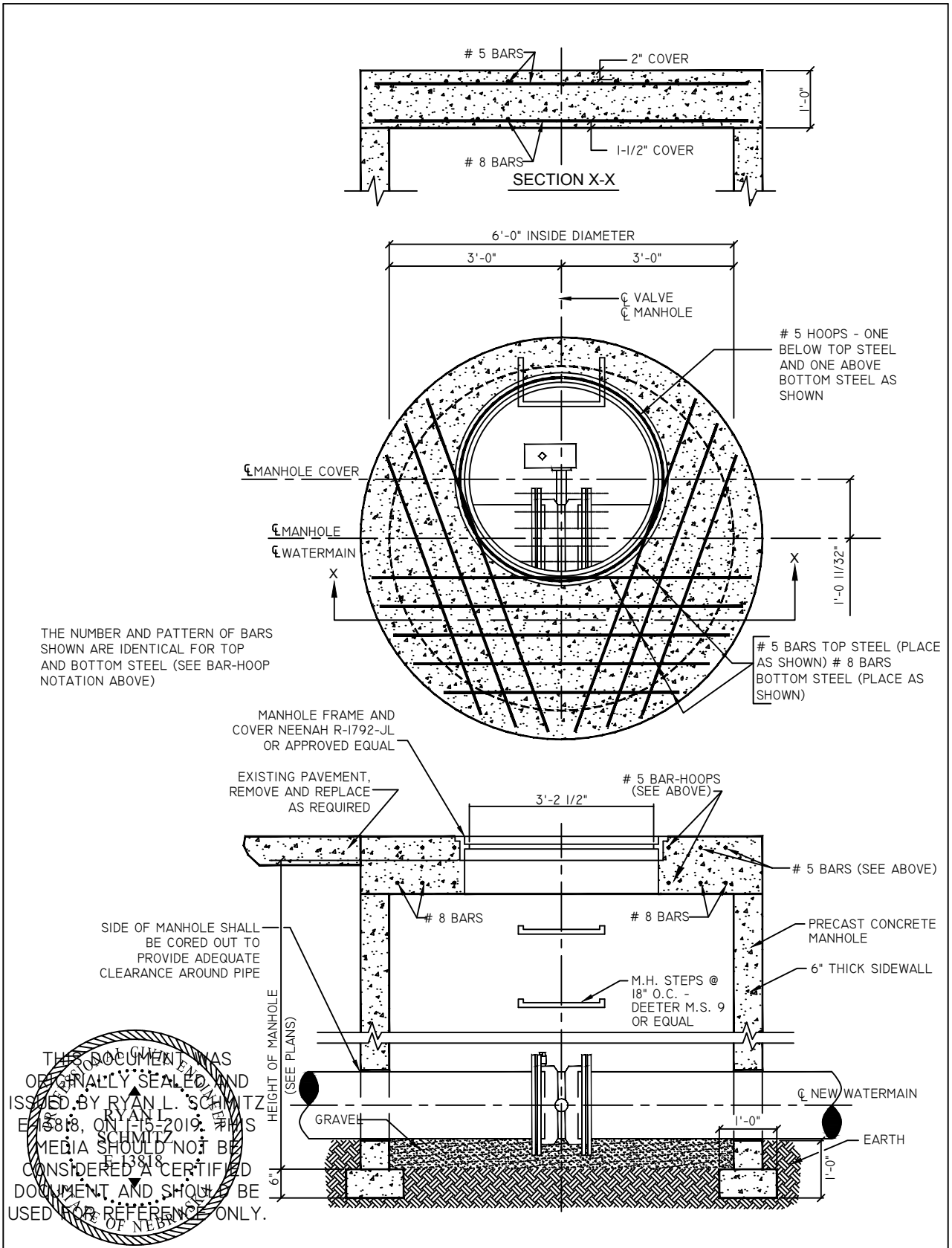

THIS DOCUMENT WAS ORIGINALLY SEALED AND ISSUED BY RYAN L. SCHMITZ E-13818, ON 1-15-2019. THIS MEDIA SHOULD NOT BE CONSIDERED A CERTIFIED DOCUMENT AND SHOULD BE USED FOR REFERENCE ONLY.
PROFESSIONAL ENGINEER
RYAN L. SCHMITZ
E-13818
STATE OF NEBRASKA

CITY OF GRAND ISLAND UTILITIES DEPARTMENT	REVISED: 1/7/2019 DRAWN BY: TDZ CHECKED BY: R.L.S.	STANDARD WATER VALVE MANHOLE FOR 10" OR LARGER VALVES	PLAN 136

SANITARY SEWER CROSSING OVER WATER MAIN

NO SCALE

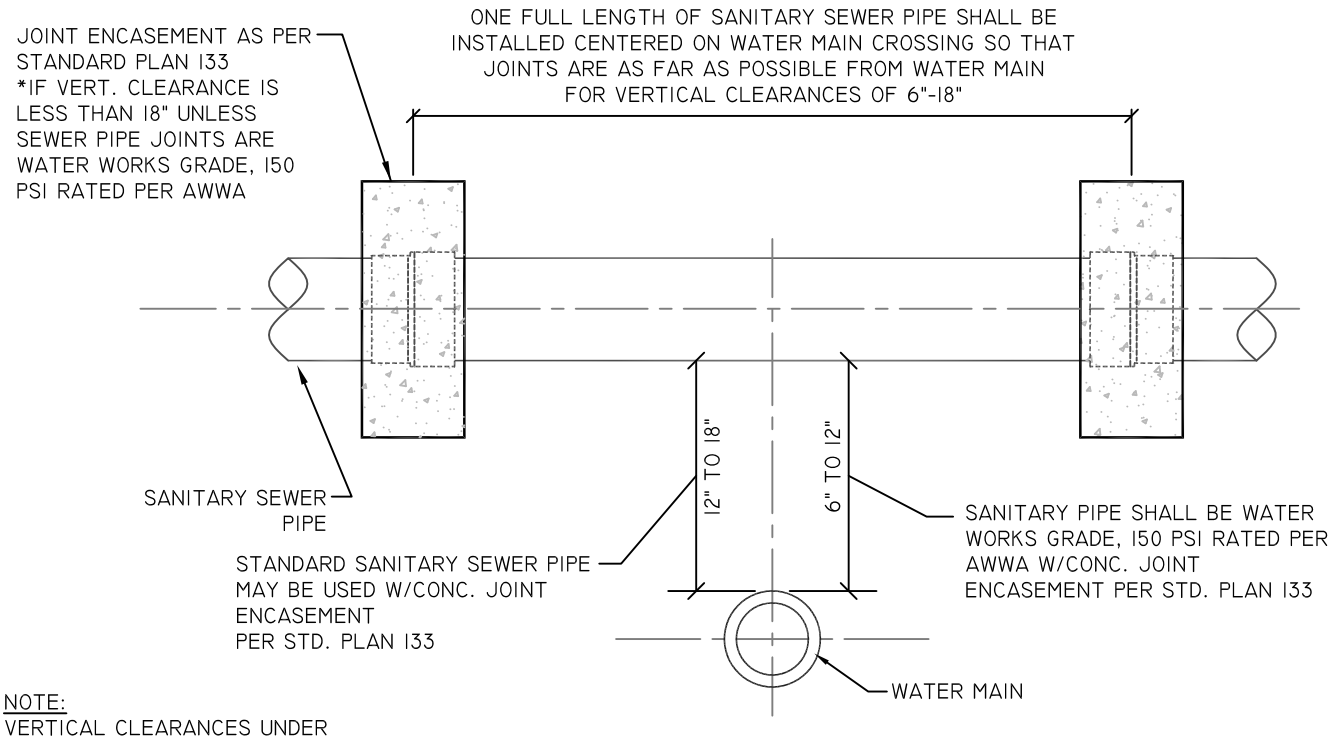

NOTE:
VERTICAL CLEARANCES UNDER 18" SHALL REQUIRE APPROVAL FROM THE UTILITIES DEPT.

NOTE:
WHEN MORE THAN 18" OF VERT. CLEARANCE EXISTS, STANDARD SANITARY SEWER PIPE MAY BE USED THROUGHOUT.

SANITARY SEWER CROSSING UNDER WATER MAIN

NO SCALE

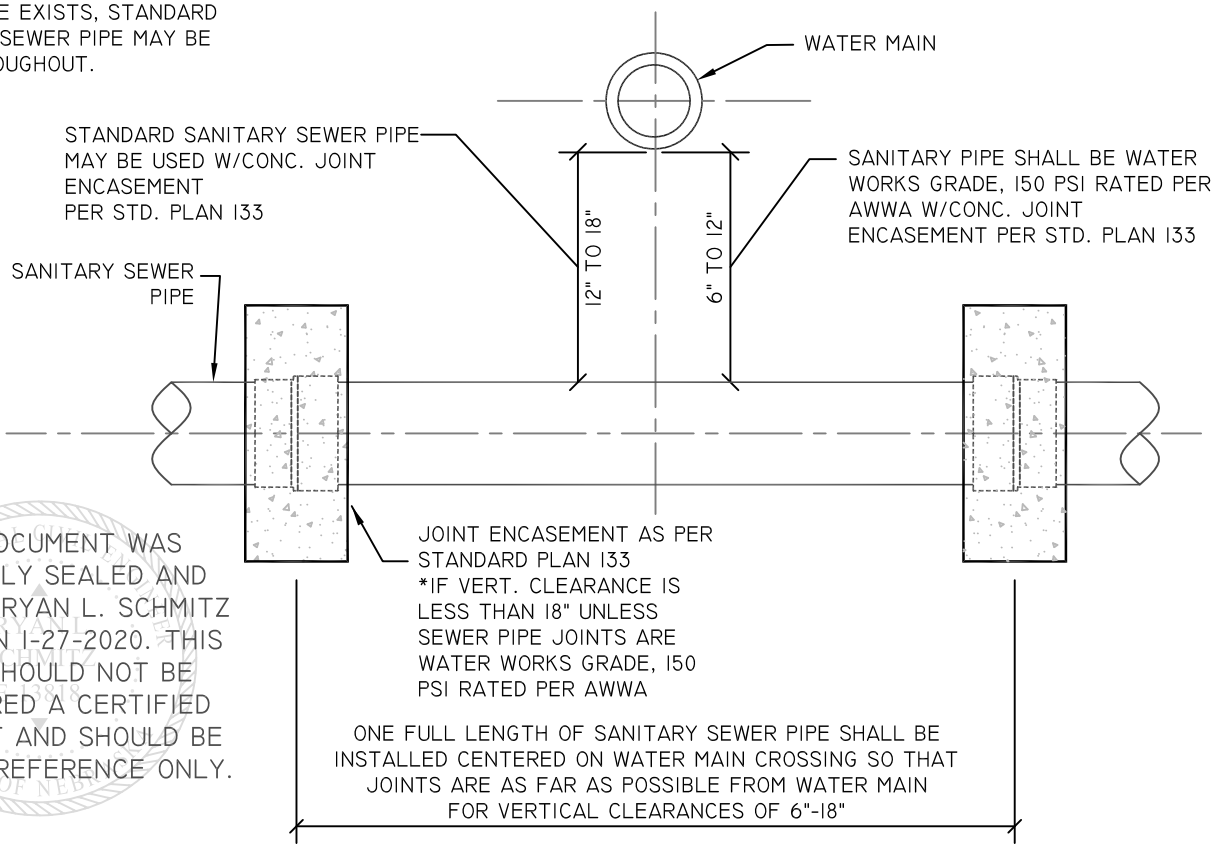

THIS DOCUMENT WAS ORIGINALLY SEALED AND ISSUED BY RYAN L. SCHMITZ E-13818, ON 1-27-2020. THIS MEDIA SHOULD NOT BE CONSIDERED A CERTIFIED DOCUMENT AND SHOULD BE USED FOR REFERENCE ONLY.

CITY OF GRAND ISLAND UTILITIES DEPARTMENT	REVISED: 12/11/2019 DRAWN BY: TDZ CHECKED BY: R.L.S.	SEWER - WATER MAIN CROSSING DETAILS	PLAN 138 1 of 4

FORCED MAIN SANITARY SEWER CROSSING OVER WATER MAIN

NO SCALE

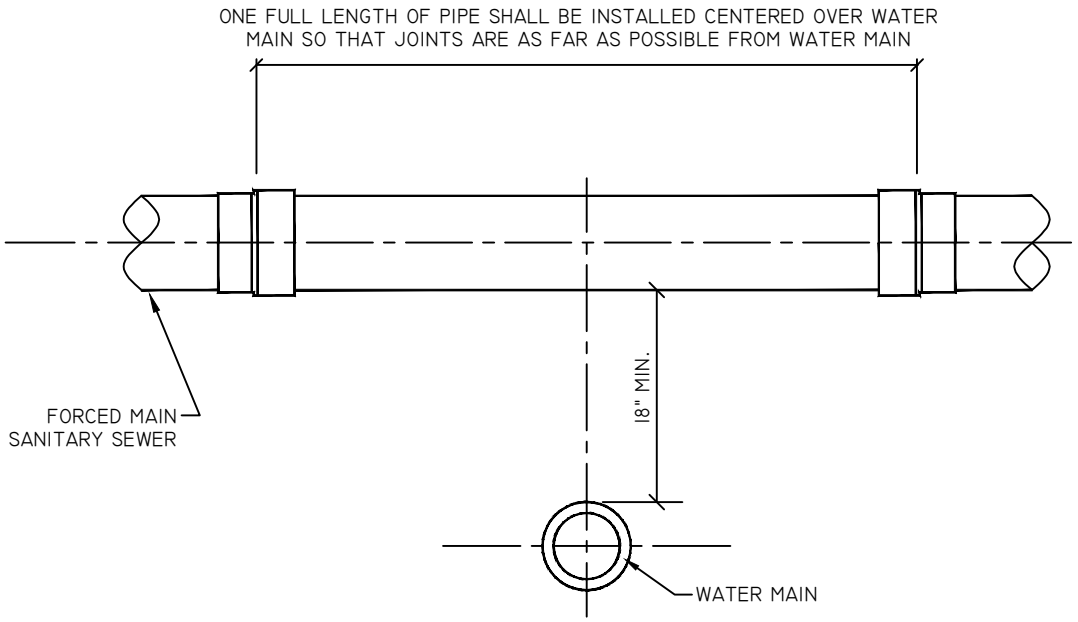

FORCED MAIN SANITARY SEWER CROSSING UNDER WATER MAIN

NO SCALE

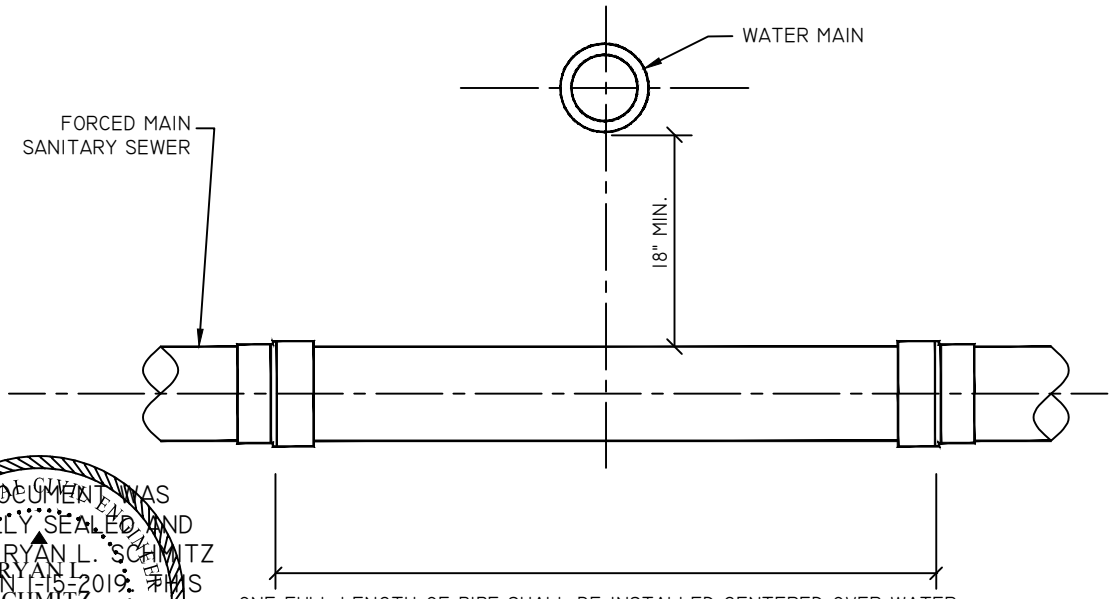

THIS DOCUMENT WAS ORIGINALLY SEALED AND ISSUED BY RYAN L. SCHMITZ E-13818, ON 1-15-2019. THIS MEDIA SHOULD NOT BE CONSIDERED A CERTIFIED DOCUMENT AND SHOULD BE USED FOR REFERENCE ONLY.

RYAN L. SCHMITZ E-13818

REGISTERED PROFESSIONAL ENGINEER STATE OF NEBRASKA

CITY OF GRAND ISLAND UTILITIES DEPARTMENT	REVISED: 1/7/2019 DRAWN BY: TDZ CHECKED BY: R.L.S.	SEWER - WATER MAIN CROSSING DETAILS	PLAN 138 2 of 4

STORM SEWER CROSSING OVER WATER MAIN

NO SCALE

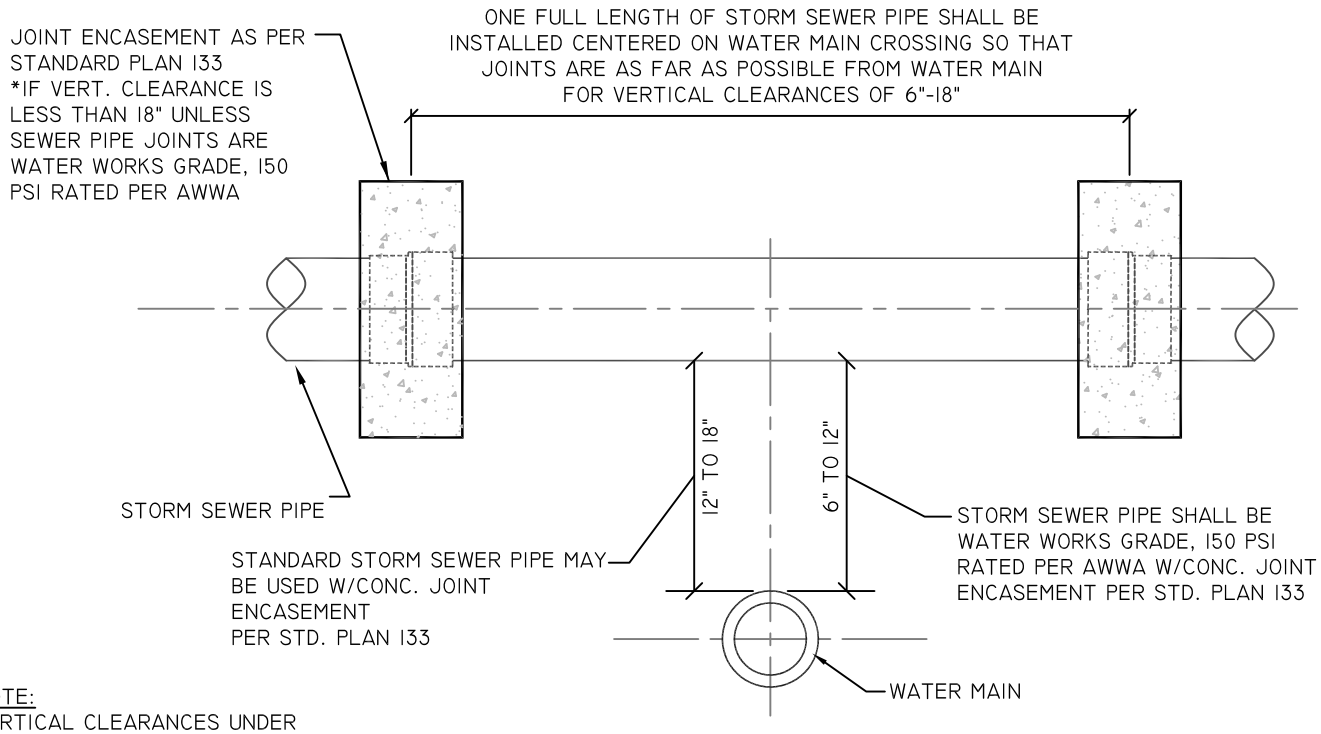

NOTE:
VERTICAL CLEARANCES UNDER 18" SHALL REQUIRE APPROVAL FROM THE UTILITIES DEPT.

NOTE:
WHEN MORE THAN 18" OF VERT. CLEARANCE EXISTS, STANDARD STORM SEWER PIPE MAY BE USED THROUGHOUT.

STORM SEWER CROSSING UNDER WATER MAIN

NO SCALE

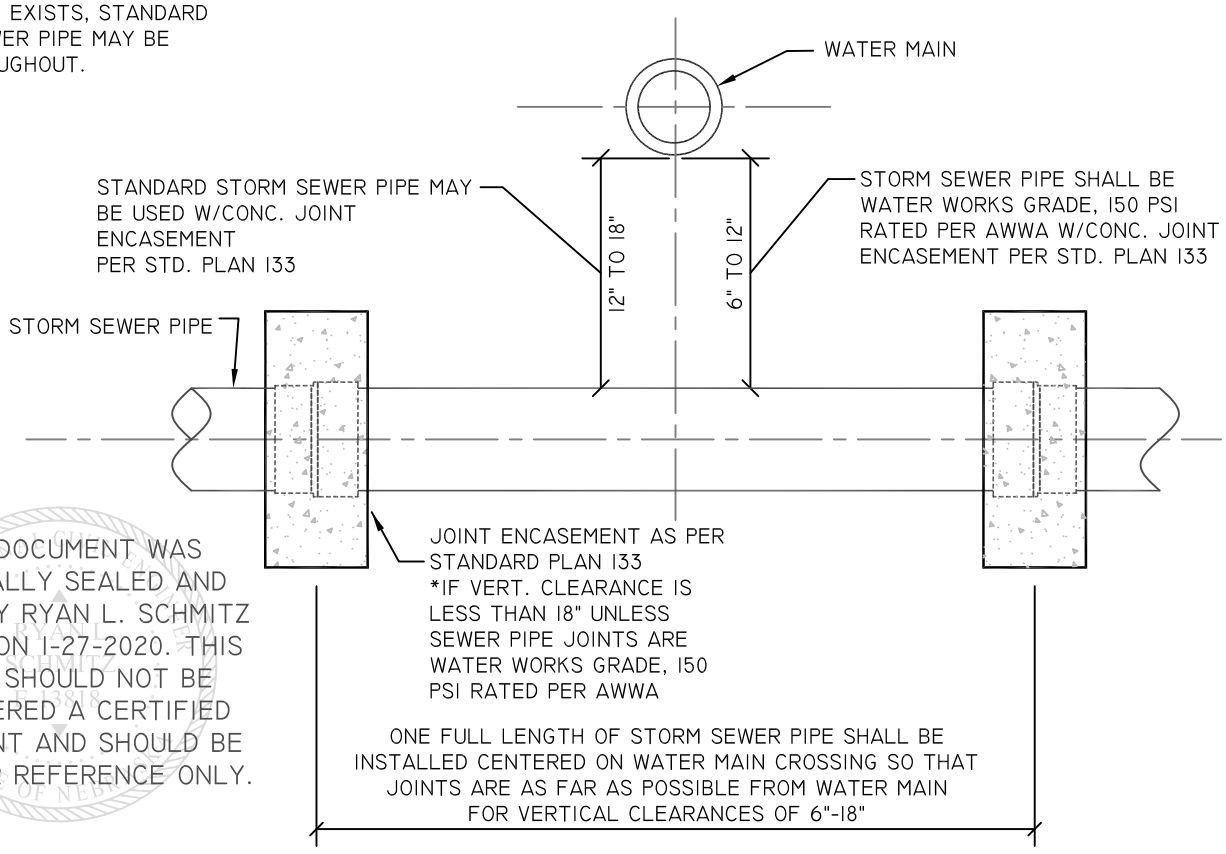

THIS DOCUMENT WAS ORIGINALLY SEALED AND ISSUED BY RYAN L. SCHMITZ E-13818, ON 1-27-2020. THIS MEDIA SHOULD NOT BE CONSIDERED A CERTIFIED DOCUMENT AND SHOULD BE USED FOR REFERENCE ONLY.

CITY OF GRAND ISLAND UTILITIES DEPARTMENT	REVISED: 12/11/2019 DRAWN BY: TDZ CHECKED BY: R.L.S.	SEWER - WATER MAIN CROSSING DETAILS	PLAN 138 3 of 4

WATER MAIN CROSSING UNDER SEWER / DRAINAGE WAY

NO SCALE

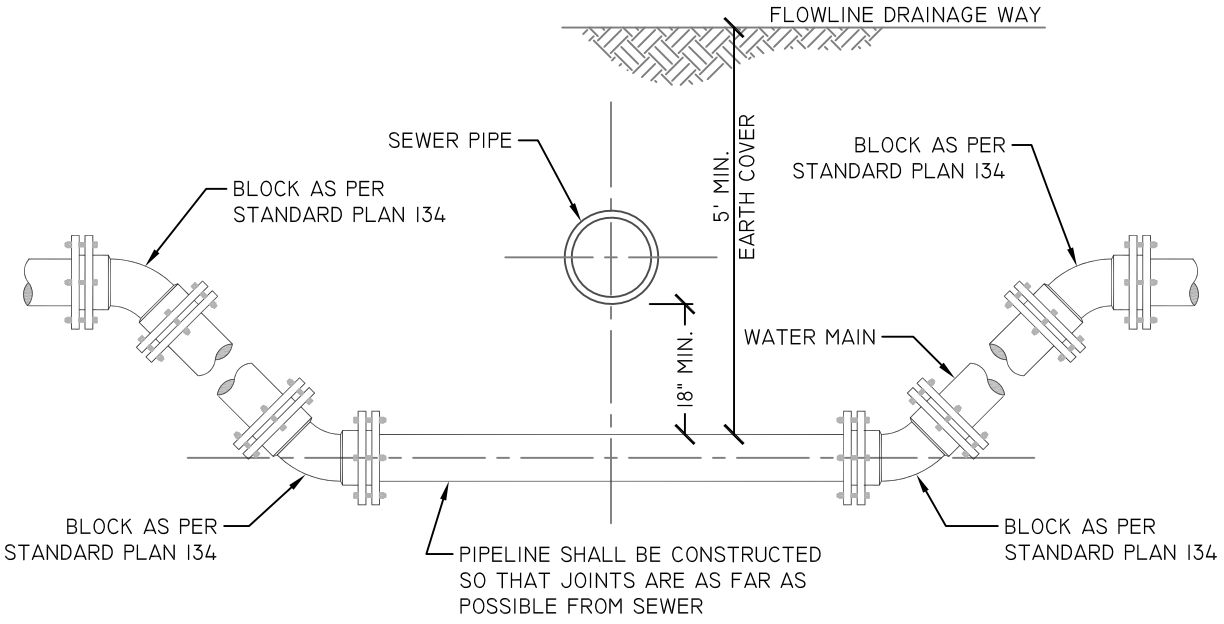

WATER MAIN CROSSING OVER SEWER / DRAINAGE WAY

NO SCALE

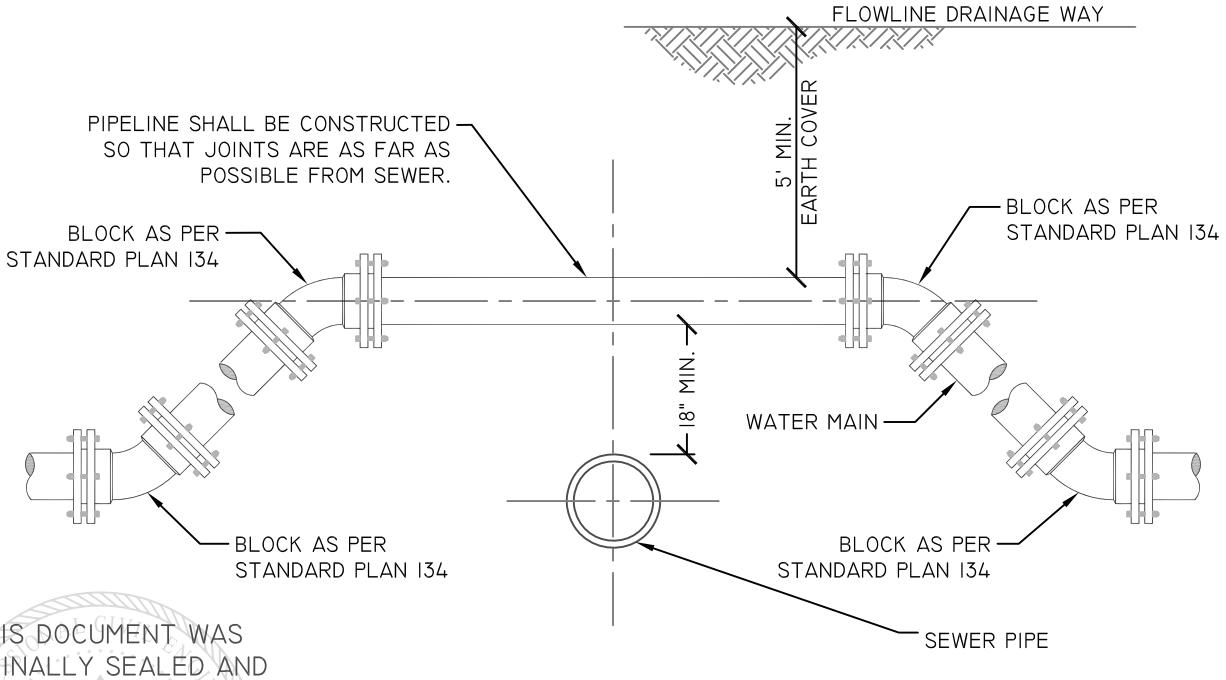

THIS DOCUMENT WAS ORIGINALLY SEALED AND ISSUED BY RYAN L. SCHMITZ E-13818, ON 1-27-2020. THIS MEDIA SHOULD NOT BE CONSIDERED A CERTIFIED DOCUMENT AND SHOULD BE USED FOR REFERENCE ONLY.

NOTE:

1. IN BOTH CONFIGURATIONS, THE USE OF RETAINER GLANDS INSTEAD OF OR IN ADDITION TO THRUST BLOCKS MAY BE ACCEPTABLE AT THE DIRECTION OF THE UTILITIES DEPT.
2. FOR 12" AND LARGER WATER MAINS, 22 ½° BENDS SHALL BE USED FOR VERTICAL DEFLECTIONS

CITY OF GRAND ISLAND UTILITIES DEPARTMENT	REVISED: 12/11/2019 DRAWN BY: TDZ CHECKED BY: R.L.S.	SEWER - WATER MAIN CROSSING DETAILS	PLAN 138 4 of 4

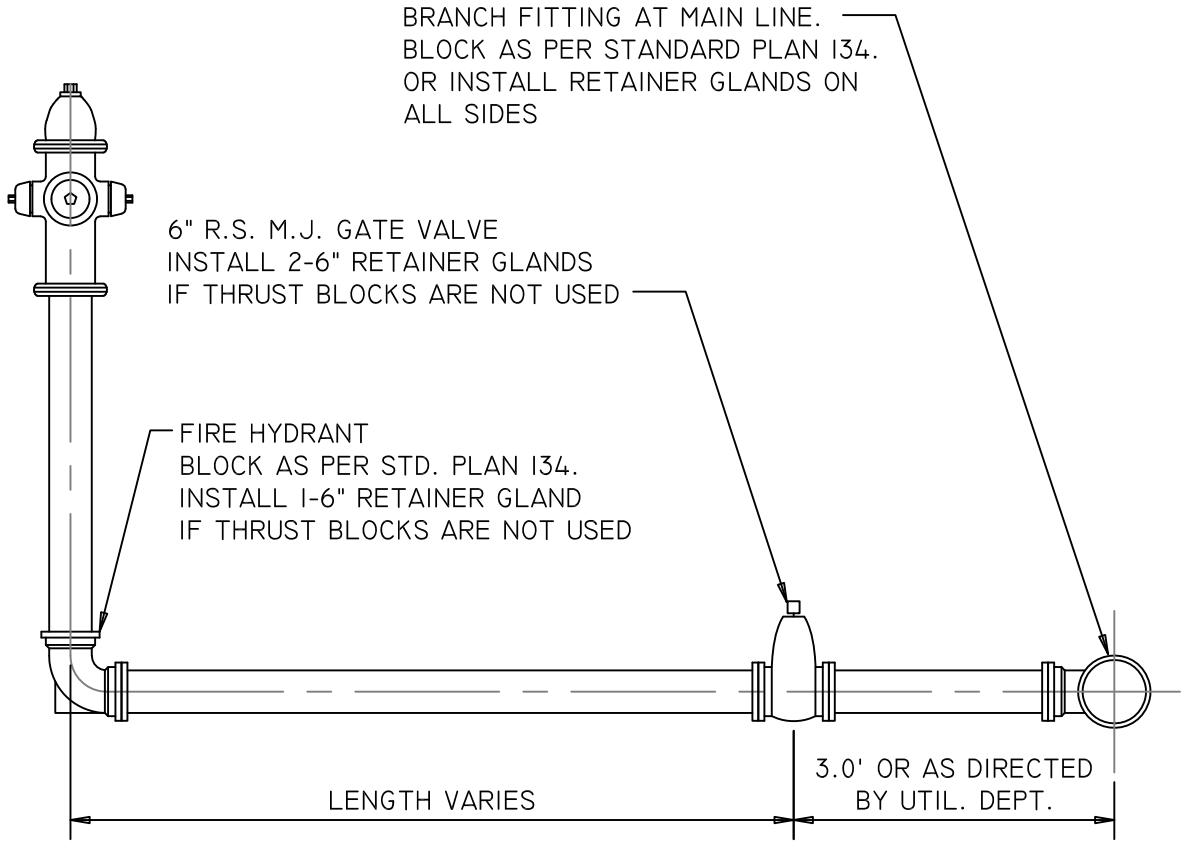

NOTES:

1. IF RETAINER GLANDS ARE INSTALLED ON ALL JOINTS AND THRUST BLOCKS ARE NOT USED DOWNSTREAM OF THE BRANCH FITTING, RETAINER GLANDS SHALL BE INSTALLED ON ALL SIDES OF THE BRANCH FITTING. THE USE OF RETAINER GLANDS IN PLACE OF THRUST BLOCKS SHALL BE AT THE DISCRETION OF THE UTILITIES DEPT.
2. EACH FIRE HYDRANT INSTALLATION SHALL BE ITEMIZED FOR PAYMENT AT CONTRACT UNIT PRICES FOR ALL INDIVIDUAL MATERIAL AND FITTINGS REQUIRED TO COMPLETE THE ASSEMBLY.
3. THE CONTRACTOR SHALL SET OR TURN ALL FIRE HYDRANTS SO THE PUMPER NOZZLE FACES THE DRIVEN ROADWAY OR AS OTHERWISE DIRECTED BY THE UTILITIES DEPARTMENT.
4. WHERE FIRE HYDRANTS ARE LOCATED IN A HARD SURFACED ISLAND OR PARKING AREA, THE CONTRACTOR SHALL PROVIDE AN 18" BLOCK-OUT AROUND THE HYDRANT BARREL FILLED WITH COMPACTED SOIL.
5. FIRE HYDRANTS SHALL BE INSTALLED A MINIMUM OF 18" FROM THE EDGE OF ANY SIDEWALK AND A MINIMUM OF 6' FROM ANY DRIVING LANE.
6. FIRE HYDRANT SHALL BE SET ON COMMON PAVER BLOCK TO ESTABLISH CORRECT ELEVATION.

THIS DOCUMENT WAS ORIGINALLY SEALED AND ISSUED BY RYAN L. SCHMITZ E-13818, ON 1-27-2020. THIS MEDIA SHOULD NOT BE CONSIDERED A CERTIFIED DOCUMENT AND SHOULD BE USED FOR REFERENCE ONLY.

CITY OF GRAND ISLAND UTILITIES DEPARTMENT	REVISED: 1/13/2020 DRAWN BY: TDZ CHECKED BY: R.L.S.	FIRE HYDRANT TYPICAL INSTALLATION TYPE 1	PLAN 140 1 of 5

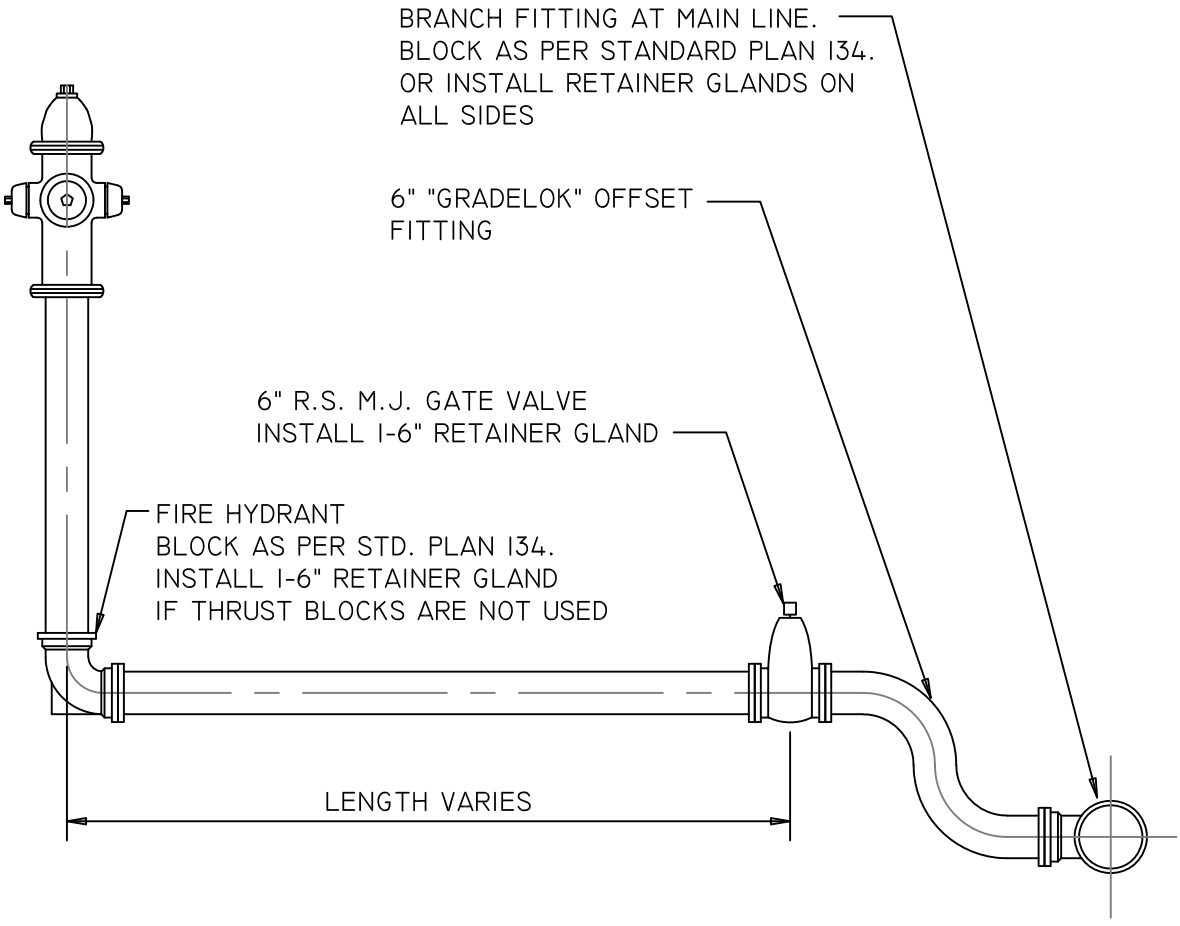

NOTES:

1. IF RETAINER GLANDS ARE INSTALLED ON ALL JOINTS AND THRUST BLOCKS ARE NOT USED DOWNSTREAM OF THE BRANCH FITTING, RETAINER GLANDS SHALL BE INSTALLED ON ALL SIDES OF THE BRANCH FITTING. THE USE OF RETAINER GLANDS IN PLACE OF THRUST BLOCKS SHALL BE AT THE DISCRETION OF THE UTILITIES DEPT.
2. EACH FIRE HYDRANT INSTALLATION SHALL BE ITEMIZED FOR PAYMENT AT CONTRACT UNIT PRICES FOR ALL INDIVIDUAL MATERIAL AND FITTINGS REQUIRED TO COMPLETE THE ASSEMBLY.
3. THE CONTRACTOR SHALL SET OR TURN ALL FIRE HYDRANTS SO THE PUMPER NOZZLE FACES THE DRIVEN ROADWAY OR AS OTHERWISE DIRECTED BY THE UTILITIES DEPARTMENT.
4. WHERE FIRE HYDRANTS ARE LOCATED IN A HARD SURFACED ISLAND OR PARKING AREA, THE CONTRACTOR SHALL PROVIDE AN 18" BLOCK-OUT AROUND THE HYDRANT BARREL FILLED WITH COMPACTED SOIL.
5. FIRE HYDRANTS SHALL BE INSTALLED A MINIMUM OF 18" FROM THE EDGE OF ANY SIDEWALK AND A MINIMUM OF 6' FROM ANY DRIVING LANE.
6. FIRE HYDRANT SHALL BE SET ON COMMON PAVER BLOCK TO ESTABLISH CORRECT ELEVATION.
7. FITTINGS AND ETC... FOR VERTICAL ADJUSTMENT MAY USED DOWNSTREAM OF THE HYDRANT AUXILARY VALVE WITH APPROVAL OF THE UTILITIES DEPT.

THIS DOCUMENT WAS ORIGINALLY SEALED AND ISSUED BY RYAN L. SCHMITZ E-13818, ON 1-27-2020. THIS MEDIA SHOULD NOT BE CONSIDERED A CERTIFIED DOCUMENT AND SHOULD BE USED FOR REFERENCE ONLY.

CITY OF GRAND ISLAND UTILITIES DEPARTMENT	REVISED: 1/13/2020 DRAWN BY: TDZ CHECKED BY: R.L.S.	FIRE HYDRANT TYPICAL INSTALLATION TYPE 2	PLAN 140 2 of 5

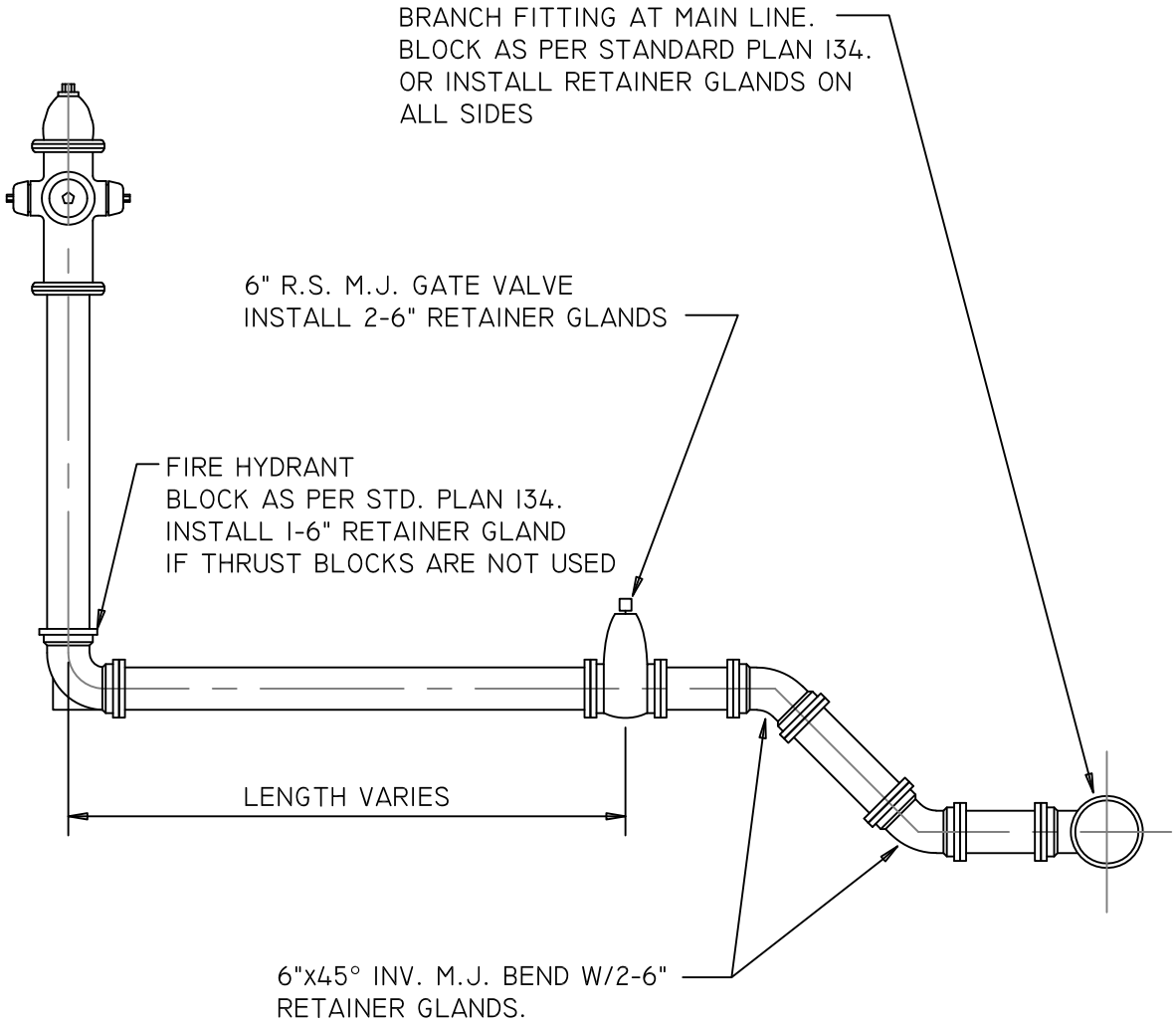

NOTES:

1. IF RETAINER GLANDS ARE INSTALLED ON ALL JOINTS AND THRUST BLOCKS ARE NOT USED DOWNSTREAM OF THE BRANCH FITTING, RETAINER GLANDS SHALL BE INSTALLED ON ALL SIDES OF THE BRANCH FITTING. THE USE OF RETAINER GLANDS IN PLACE OF THRUST BLOCKS SHALL BE AT THE DISCRETION OF THE UTILITIES DEPT.
2. EACH FIRE HYDRANT INSTALLATION SHALL BE ITEMIZED FOR PAYMENT AT CONTRACT UNIT PRICES FOR ALL INDIVIDUAL MATERIAL AND FITTINGS REQUIRED TO COMPLETE THE ASSEMBLY.
3. THE CONTRACTOR SHALL SET OR TURN ALL FIRE HYDRANTS SO THE PUMPER NOZZLE FACES THE DRIVEN ROADWAY OR AS OTHERWISE DIRECTED BY THE UTILITIES DEPARTMENT.
4. WHERE FIRE HYDRANTS ARE LOCATED IN A HARD SURFACED ISLAND OR PARKING AREA, THE CONTRACTOR SHALL PROVIDE AN 18" BLOCK-OUT AROUND THE HYDRANT BARREL FILLED WITH COMPACTED SOIL.
5. FIRE HYDRANTS SHALL BE INSTALLED A MINIMUM OF 18" FROM THE EDGE OF ANY SIDEWALK AND A MINIMUM OF 6' FROM ANY DRIVING LANE.
6. FIRE HYDRANT SHALL BE SET ON COMMON PAVER BLOCK TO ESTABLISH CORRECT ELEVATION.
7. FITTINGS AND ETC... FOR VERTICAL ADJUSTMENT MAY USED DOWNSTREAM OF THE HYDRANT AUXILARY VALVE WITH APPROVAL OF THE UTILITIES DEPT.

THIS DOCUMENT WAS ORIGINALLY SEALED AND ISSUED BY RYAN L. SCHMITZ E-13818, ON 1-27-2020. THIS MEDIA SHOULD NOT BE CONSIDERED A CERTIFIED DOCUMENT AND SHOULD BE USED FOR REFERENCE ONLY.

CITY OF GRAND ISLAND UTILITIES DEPARTMENT	REVISED: 1/13/2020 DRAWN BY: TDZ CHECKED BY: R.L.S.	FIRE HYDRANT TYPICAL INSTALLATION TYPE 3	PLAN 140 3 of 5

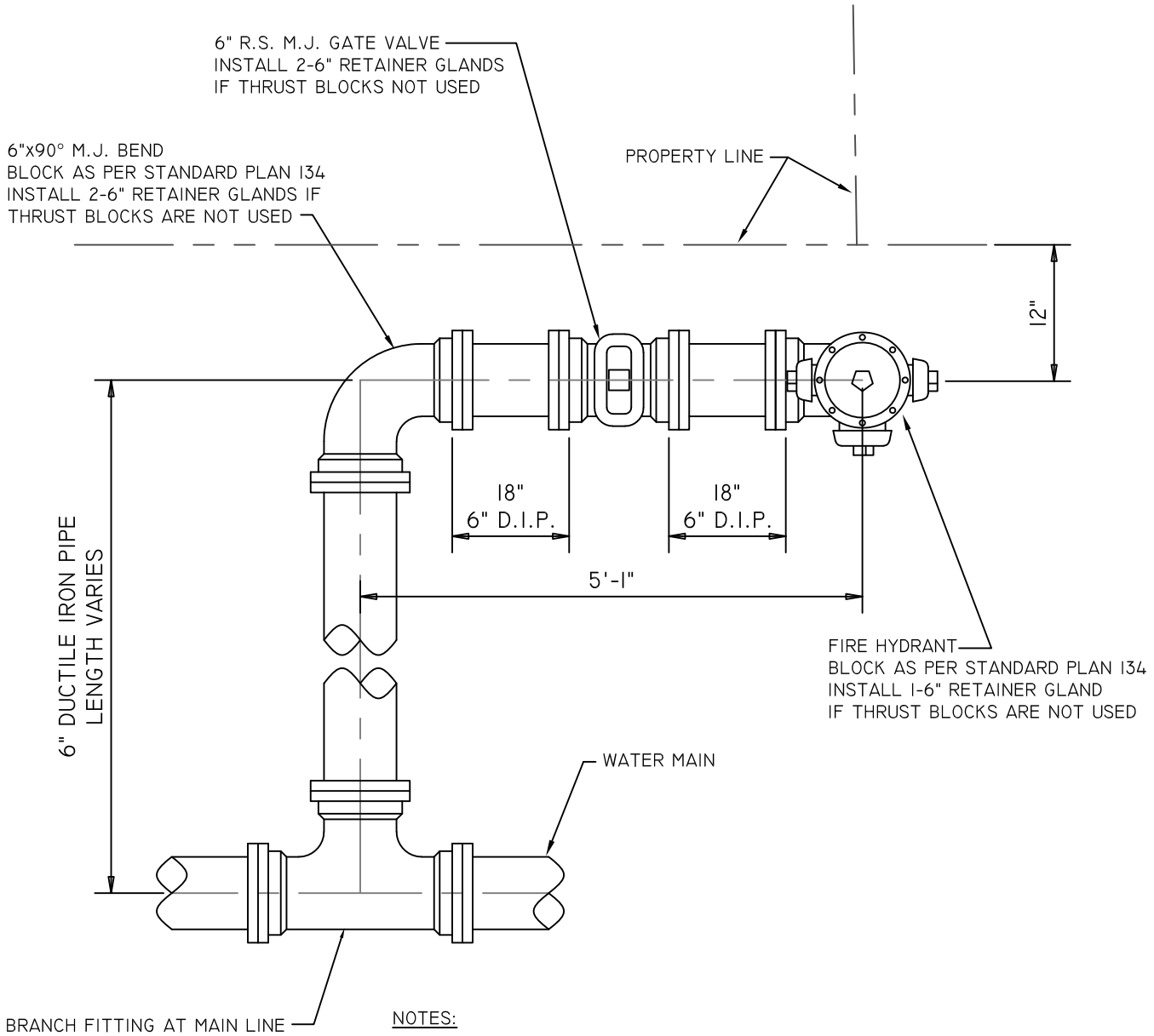

NOTES:

1. IF RETAINER GLANDS ARE INSTALLED ON ALL JOINTS AND THRUST BLOCKS ARE NOT USED DOWNSTREAM OF THE BRANCH FITTING, RETAINER GLANDS SHALL BE INSTALLED ON ALL SIDES OF THE BRANCH FITTING. THE USE OF RETAINER GLANDS IN PLACE OF THRUST BLOCKS SHALL BE AT THE DISCRETION OF THE UTILITIES DEPT.
2. EACH FIRE HYDRANT INSTALLATION SHALL BE ITEMIZED FOR PAYMENT AT CONTRACT UNIT PRICES FOR ALL INDIVIDUAL MATERIAL AND FITTINGS REQUIRED TO COMPLETE THE ASSEMBLY.
3. THE CONTRACTOR SHALL SET OR TURN ALL FIRE HYDRANTS SO THE PUMPER NOZZLE FACES THE DRIVEN ROADWAY OR AS OTHERWISE DIRECTED BY THE UTILITIES DEPARTMENT.
4. WHERE FIRE HYDRANTS ARE LOCATED IN A HARD SURFACED ISLAND OR PARKING AREA, THE CONTRACTOR SHALL PROVIDE AN 18" BLOCK-OUT AROUND THE HYDRANT BARREL FILLED WITH COMPACTED SOIL.
5. FIRE HYDRANTS SHALL BE INSTALLED A MINIMUM OF 18" FROM THE EDGE OF ANY SIDEWALK AND A MINIMUM OF 6' FROM ANY DRIVING LANE.
6. FIRE HYDRANT SHALL BE SET ON COMMON PAVER BLOCK TO ESTABLISH CORRECT ELEVATION.

THIS DOCUMENT WAS ORIGINALLY SEALED AND ISSUED BY RYAN L. SCHMITZ E-13818, ON 1-27-2020. THIS MEDIA SHOULD NOT BE CONSIDERED A CERTIFIED DOCUMENT AND SHOULD BE USED FOR REFERENCE ONLY.

CITY OF GRAND ISLAND UTILITIES DEPARTMENT	REVISED: 1/13/2020 DRAWN BY: TDZ CHECKED BY: R.L.S.	FIRE HYDRANT TYPICAL INSTALLATION TYPE 4	PLAN 140 4 of 5

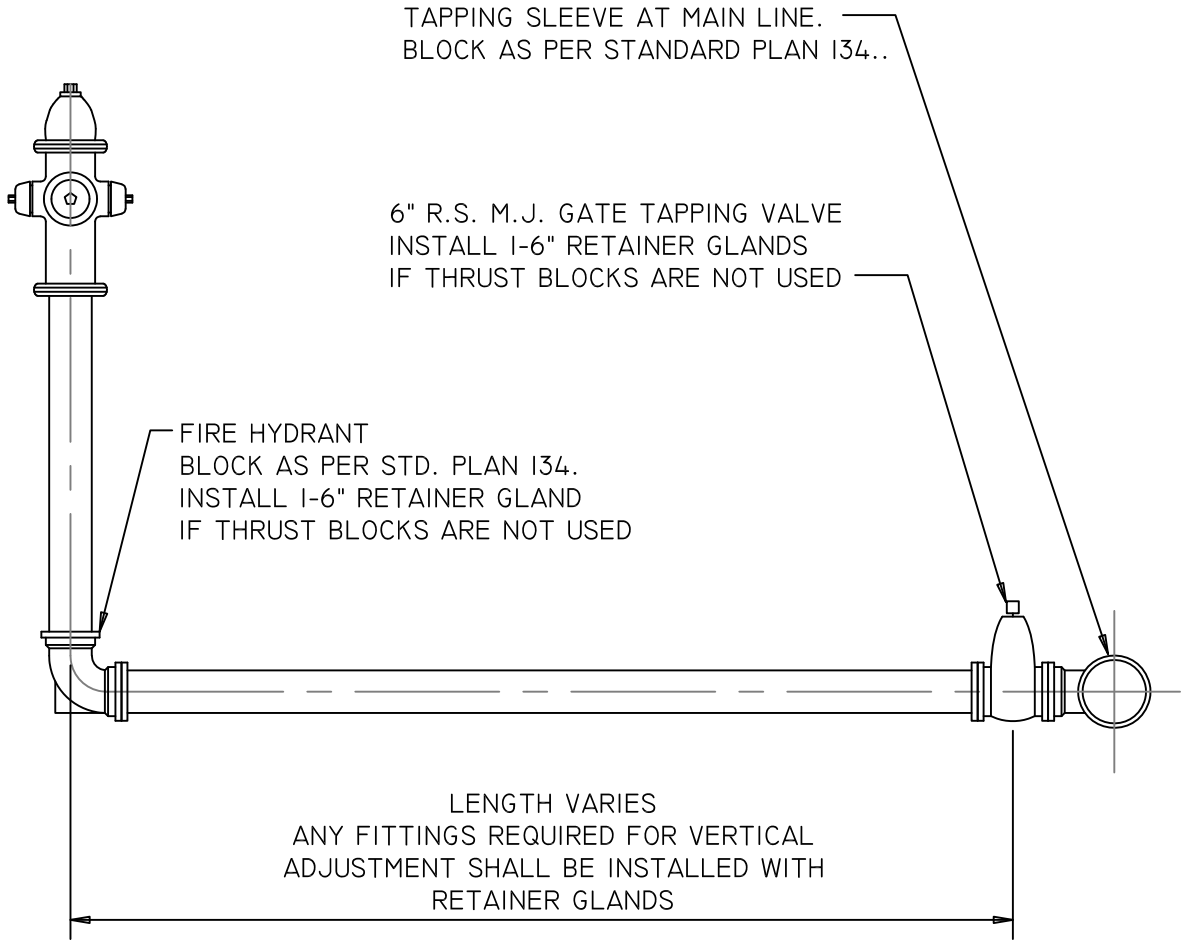

NOTES:

1. THE USE OF RETAINER GLANDS IN PLACE OF THRUST BLOCKS SHALL BE AT THE DISCRETION OF THE UTILITIES DEPT.
2. EACH FIRE HYDRANT INSTALLATION SHALL BE ITEMIZED FOR PAYMENT AT CONTRACT UNIT PRICES FOR ALL INDIVIDUAL MATERIAL AND FITTINGS REQUIRED TO COMPLETE THE ASSEMBLY.
3. THE CONTRACTOR SHALL SET OR TURN ALL FIRE HYDRANTS SO THE PUMPER NOZZLE FACES THE DRIVEN ROADWAY OR AS OTHERWISE DIRECTED BY THE UTILITIES DEPARTMENT.
4. WHERE FIRE HYDRANTS ARE LOCATED IN A HARD SURFACED ISLAND OR PARKING AREA, THE CONTRACTOR SHALL PROVIDE AN 18" BLOCK-OUT AROUND THE HYDRANT BARREL FILLED WITH COMPACTED SOIL.
5. FIRE HYDRANTS SHALL BE INSTALLED A MINIMUM OF 18" FROM THE EDGE OF ANY SIDEWALK AND A MINIMUM OF 6' FROM ANY DRIVING LANE.
6. FIRE HYDRANT SHALL BE SET ON COMMON PAVER BLOCK TO ESTABLISH CORRECT ELEVATION.

THIS DOCUMENT WAS ORIGINALLY SEALED AND ISSUED BY RYAN L. SCHMITZ E-13818, ON 1-27-2020. THIS MEDIA SHOULD NOT BE CONSIDERED A CERTIFIED DOCUMENT AND SHOULD BE USED FOR REFERENCE ONLY.

CITY OF GRAND ISLAND UTILITIES DEPARTMENT	REVISED: 1/13/2020 DRAWN BY: TDZ CHECKED BY: R.L.S.	FIRE HYDRANT TYPICAL INSTALLATION TYPE 5	PLAN 140 5 of 5

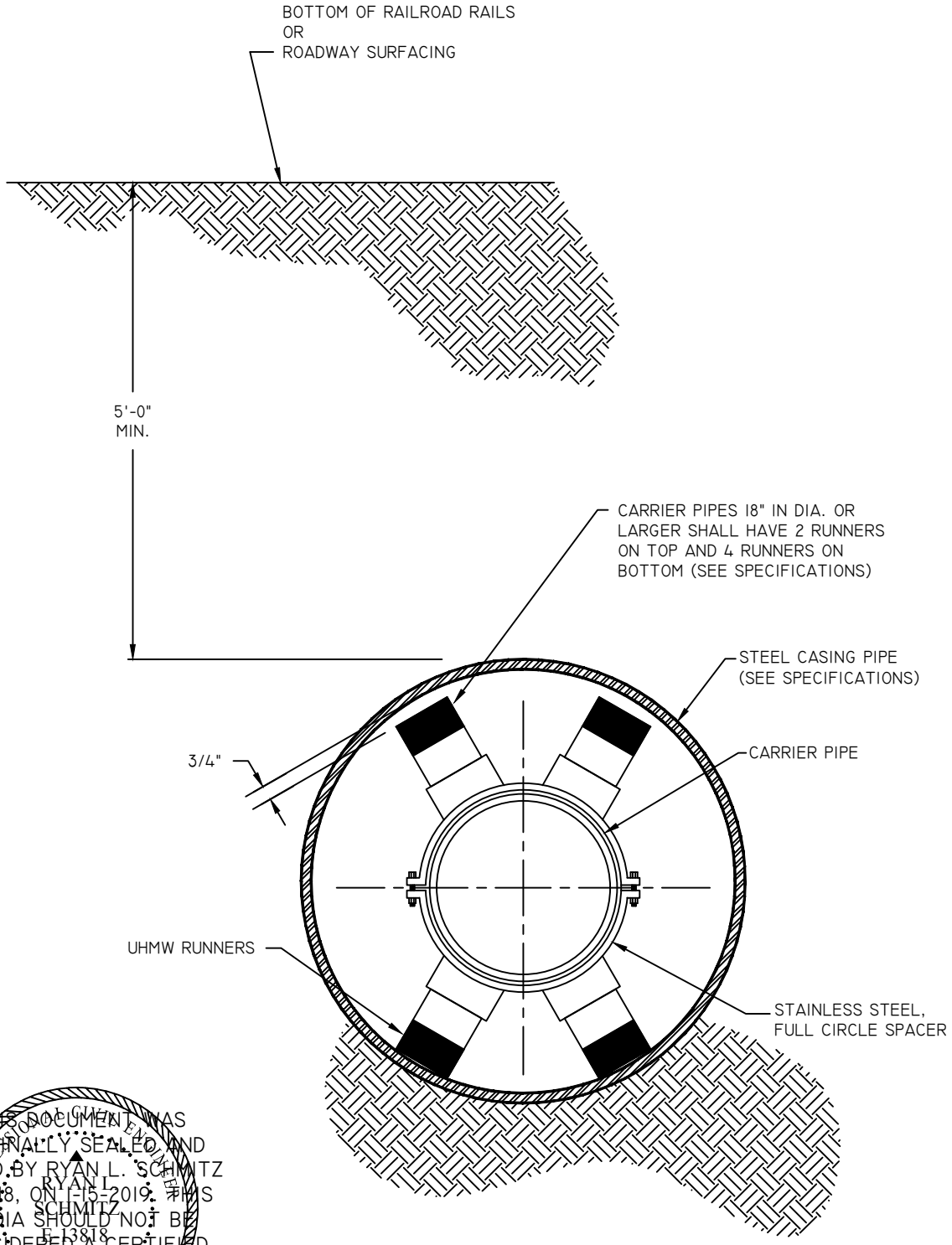

THIS DOCUMENT WAS ORIGINALLY SEALED AND ISSUED BY RYAN L. SCHMITZ E-13818, ON 1-15-2019. THIS MEDIA SHOULD NOT BE CONSIDERED A CERTIFIED DOCUMENT AND SHOULD BE USED FOR REFERENCE ONLY.

RYAN L. SCHMITZ E-13818

REGISTERED ENGINEER
STATE OF NEBRASKA

CITY OF GRAND ISLAND UTILITIES DEPARTMENT	REVISED: 1/7/2019 DRAWN BY: T.D.Z. CHECKED BY: R.L.S.	CARRIER PIPE AND ENCASEMENT	PLAN 141 1 OF 3

NOTE:
CARRIER PIPES 18" IN DIA. OR LARGER SHALL HAVE 2 RUNNERS ON TOP AND 4 RUNNERS ON BOTTOM (SEE SPECIFICATIONS)

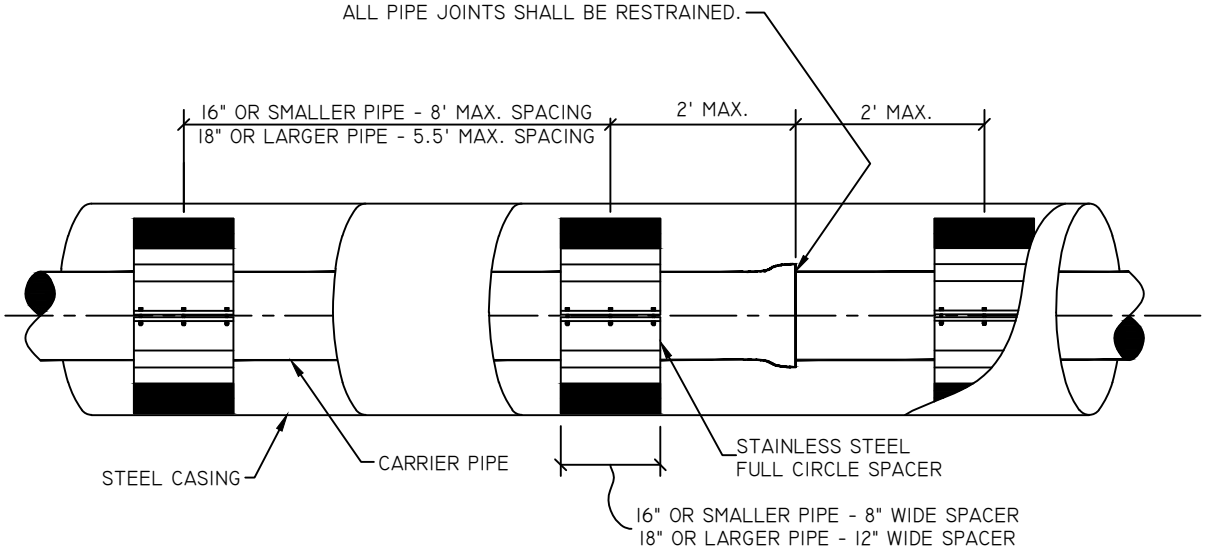

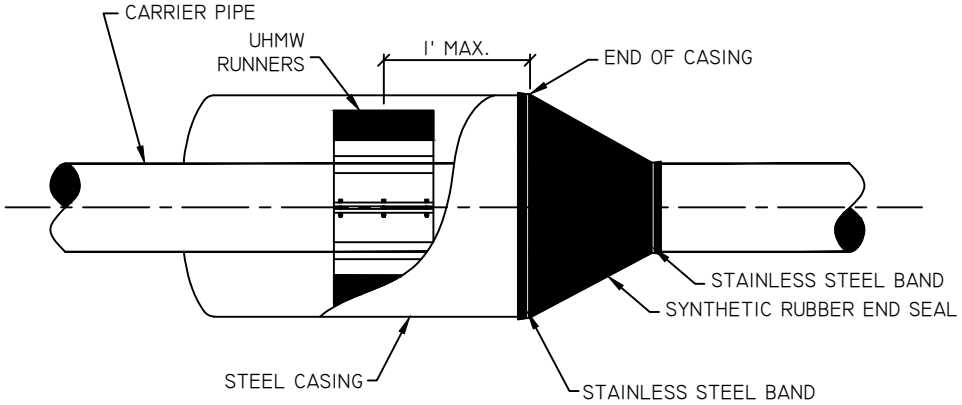

THIS DOCUMENT WAS ORIGINALLY SEALED AND ISSUED BY RYAN L. SCHMITZ E-13818, ON 1-15-2019. THIS MEDIA SHOULD NOT BE CONSIDERED A CERTIFIED DOCUMENT AND SHOULD BE USED FOR REFERENCE ONLY.
RYAN L. SCHMITZ E-13818
REGISTERED PROFESSIONAL ENGINEER
STATE OF NEBRASKA

CITY OF GRAND ISLAND UTILITIES DEPARTMENT	REVISED: 1/7/2019 DRAWN BY: T.D.Z. CHECKED BY: R.L.S.	CARRIER PIPE AND ENCASEMENT	PLAN 141 2 OF 3

STANDARD FOR SIZING CASINGS:

CARRIER PIPE DIAMETER	GLAND O.D.	CASING DIAMETER	MINIMUM WALL THICKNESS
4"	9.120	12	0.250
6"	11.120	16	0.313
8"	13.370	18	0.313
10"	15.620	20	0.375
12"	17.880	24	0.438
14"	20.250	24	0.438
16"	22.500	28	0.438
18"	24.750	30	0.500
20"	27.000	32	0.500
24"	31.500	36	0.563
30"	37.180	42	0.563
* ALL DIMENSIONS ARE IN INCHES			

THE INSIDE DIAMETER OF THE CASING PIPE SHALL EXCEED THE OUTSIDE DIAMETER OF THE CARRIER PIPE, JOINTS, OR COUPLINGS, BY 4 (FOUR) INCHES.

THE STEEL CASING PIPE SHALL HAVE A MINIMUM WALL THICKNESS AS BASED ON THE CHART SHOWN. THE CASING SHALL BE ENTIRELY OF 1 (ONE) MATERIAL AND COATED INSIDE AND OUT WITH AN ASPHALT COATING, DOUBLED FULL DIPPED. THE DESIGN OF THE CASING PIPE IS BASED ON SUPER-IMPOSED LOADS AND NOT UPON LOADS WHICH MAY BE ON CASING AS A RESULT OF THE JACKING OPERATIONS. INCREASES IN CASING STRENGTH TO WITHSTAND JACKING LOADS SHALL BE THE RESPONSIBILITY OF THE CONTRATOR.

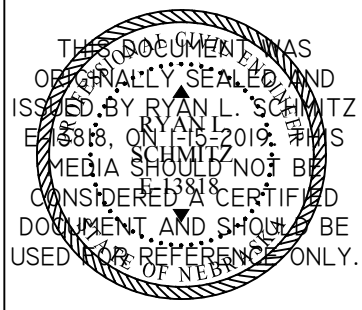

THIS DOCUMENT WAS ORIGINALLY SEALED AND ISSUED BY RYAN L. SCHMITZ E-13818, ON 1-15-2019. THIS MEDIA SHOULD NOT BE CONSIDERED A CERTIFIED DOCUMENT AND SHOULD BE USED FOR REFERENCE ONLY.

CITY OF GRAND ISLAND UTILITIES DEPARTMENT	REVISED: 1/7/2019 DRAWN BY: T.D.Z. CHECKED BY: R.L.S.	CARRIER PIPE AND ENCASEMENT	PLAN 141 3 OF 3

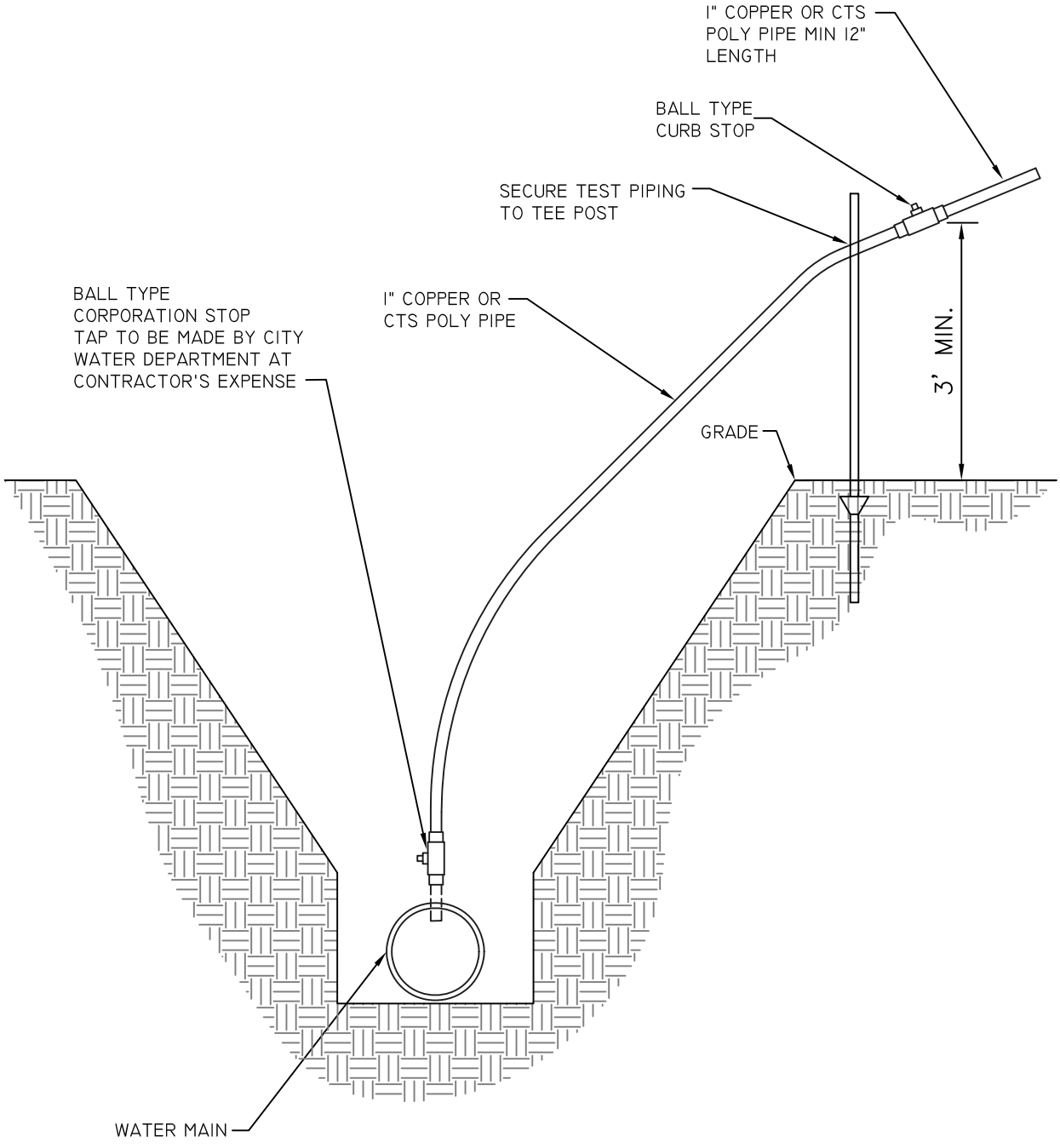

THIS DOCUMENT WAS ORIGINALLY SEALED AND ISSUED BY RYAN L. SCHMITZ E-13818, ON 1-27-2020. THIS MEDIA SHOULD NOT BE CONSIDERED A CERTIFIED DOCUMENT AND SHOULD BE USED FOR REFERENCE ONLY.

NOTES:

1. A SERVICE SADDLE SHALL BE REQUIRED FOR ALL 1-½" AND LARGER TAPS ON ALL MAINS REGARDLESS OF PIPE THICKNESS CLASS.
2. ALL TEST TAP LOCATIONS SHALL BE DETERMINED BY THE UTILITIES DEPT.
3. ALL TEST TAPS LOCATED AT MAIN CONNECTION TO CITY WATER SYSTEM SHALL BE LOCATED NO FURTHER THAN 10' FROM THE TIE VALVE.

CITY OF GRAND ISLAND UTILITIES DEPARTMENT	REVISED: 12/11/2019 DRAWN BY: TDZ CHECKED BY: R.L.S.	WATER MAIN TESTING & SAMPLING TAP	PLAN 142

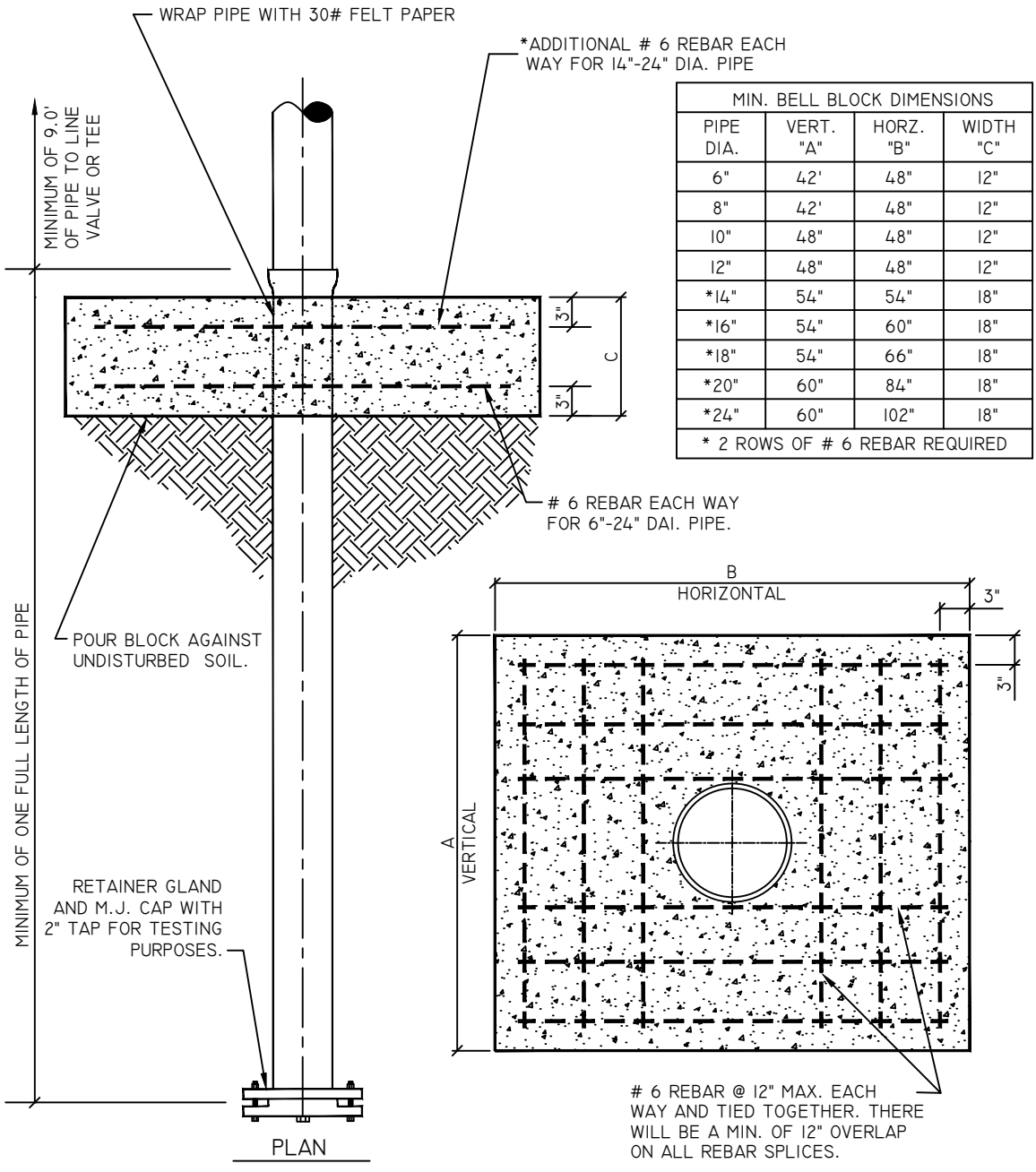

MIN. BELL BLOCK DIMENSIONS			
PIPE DIA.	VERT. "A"	HORZ. "B"	WIDTH "C"
6"	42'	48"	12"
8"	42'	48"	12"
10"	48"	48"	12"
12"	48"	48"	12"
*14"	54"	54"	18"
*16"	54"	60"	18"
*18"	54"	66"	18"
*20"	60"	84"	18"
*24"	60"	102"	18"
* 2 ROWS OF # 6 REBAR REQUIRED			

THIS DOCUMENT WAS ORIGINALLY SEALED AND ISSUED BY RYAN L. SCHMITZ E-13818, ON 1-15-2019. THIS MEDIA SHOULD NOT BE CONSIDERED A CERTIFIED DOCUMENT AND SHOULD BE USED FOR REFERENCE ONLY.
RYAN L. SCHMITZ E-13818
REGISTERED PROFESSIONAL ENGINEER
STATE OF NEBRASKA

NOTES:

1. GRANULAR BACKFILL SHALL BE PLACED IN 3" TO 6" VERTICAL LIFTS AND COMPACTED BY APRROVED MECHANICAL TAMPING DEVICE. MINIMUM EARTH COVER SHALL BE 5'-0".
2. ALL THRUST BLOCKS TO BE TYPE 47-B MODIFIED POURED CONCRETE AS PER DIVISION II; "CONCRETE PAVING SPECIFICATIONS"; AND DIVISION VI "WATER MAINS".
3. ALL CONCRETE BLOCKING SHALL BE INSTALLED IN SUCH A MANNER THAT ALL PIPE AND FITTING JOINTS ARE ACCESSIBLE.

CITY OF GRAND ISLAND UTILITIES DEPARTMENT	REVISED: 1/8/2019 DRAWN BY: TDZ CHECKED BY: R.L.S.	BELL JOINT BLOCK	PLAN 143

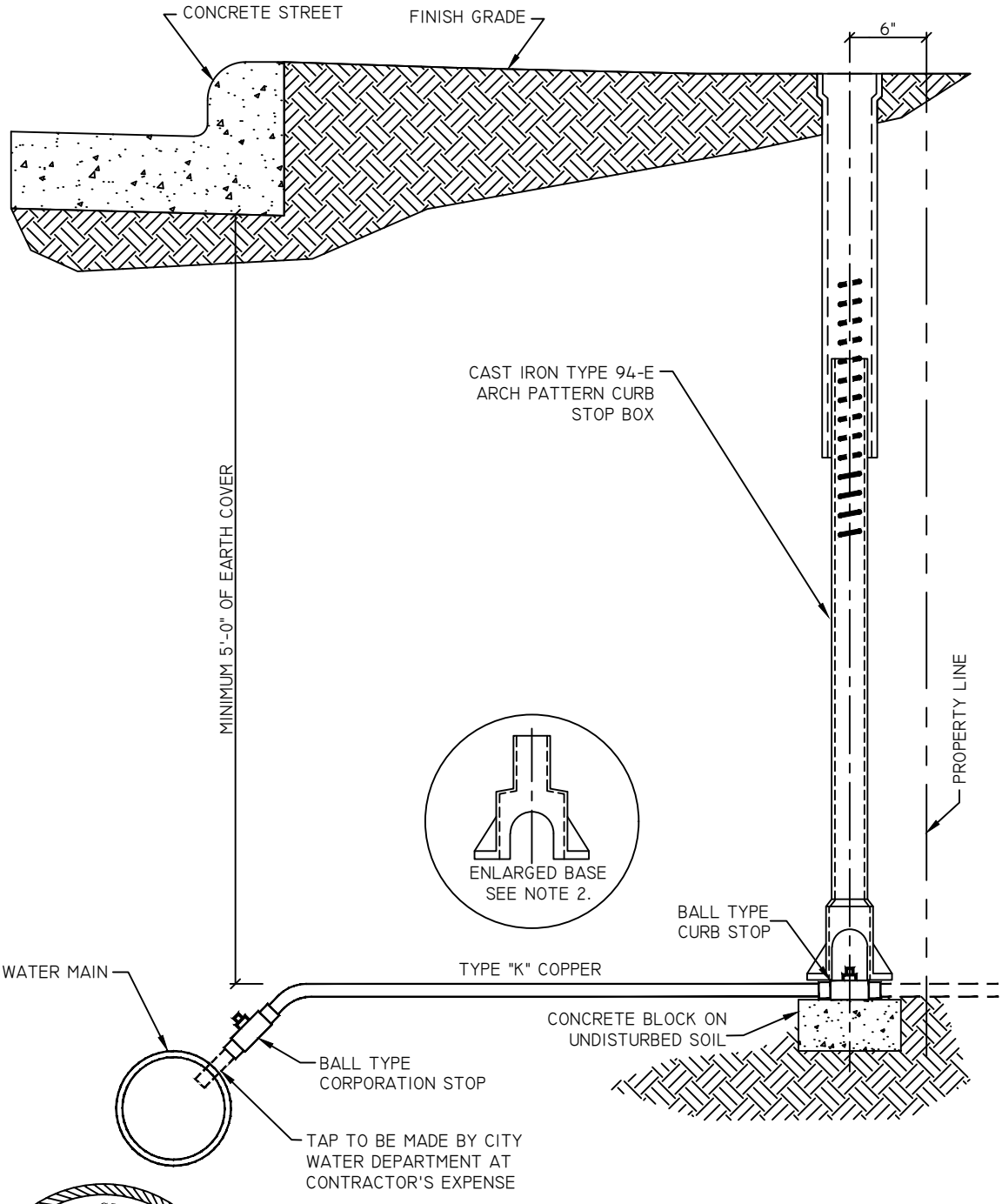

THIS DOCUMENT WAS ORIGINALLY SEALED AND ISSUED BY RYAN L. SCHMITZ E-13818, ON 1-15-2019. THIS MEDIA SHOULD NOT BE CONSIDERED A CERTIFIED DOCUMENT AND SHOULD BE USED FOR REFERENCE ONLY.

RYAN L. SCHMITZ E-13818 REGISTERED PROFESSIONAL ENGINEER STATE OF NEBRASKA

NOTES:

1. A SERVICE SADDLE SHALL BE REQUIRED FOR ALL 1-$\frac{1}{2}$" AND LARGER TAPS ON ALL MAINS REGARDLESS OF PIPE THICKNESS CLASS.
2. USE ADDITIONAL ENLARGED BASE WITH STANDARD 94-E BOX ON ALL 1-$\frac{1}{2}$" AND 2" CURB STOPS.

CITY OF GRAND ISLAND UTILITIES DEPARTMENT	REVISED: 1/8/2019 DRAWN BY: TDZ CHECKED BY: R.L.S.	1", 1-$\frac{1}{2}$", OR 2" WATER SERVICE LINE	PLAN 152 1 OF 2

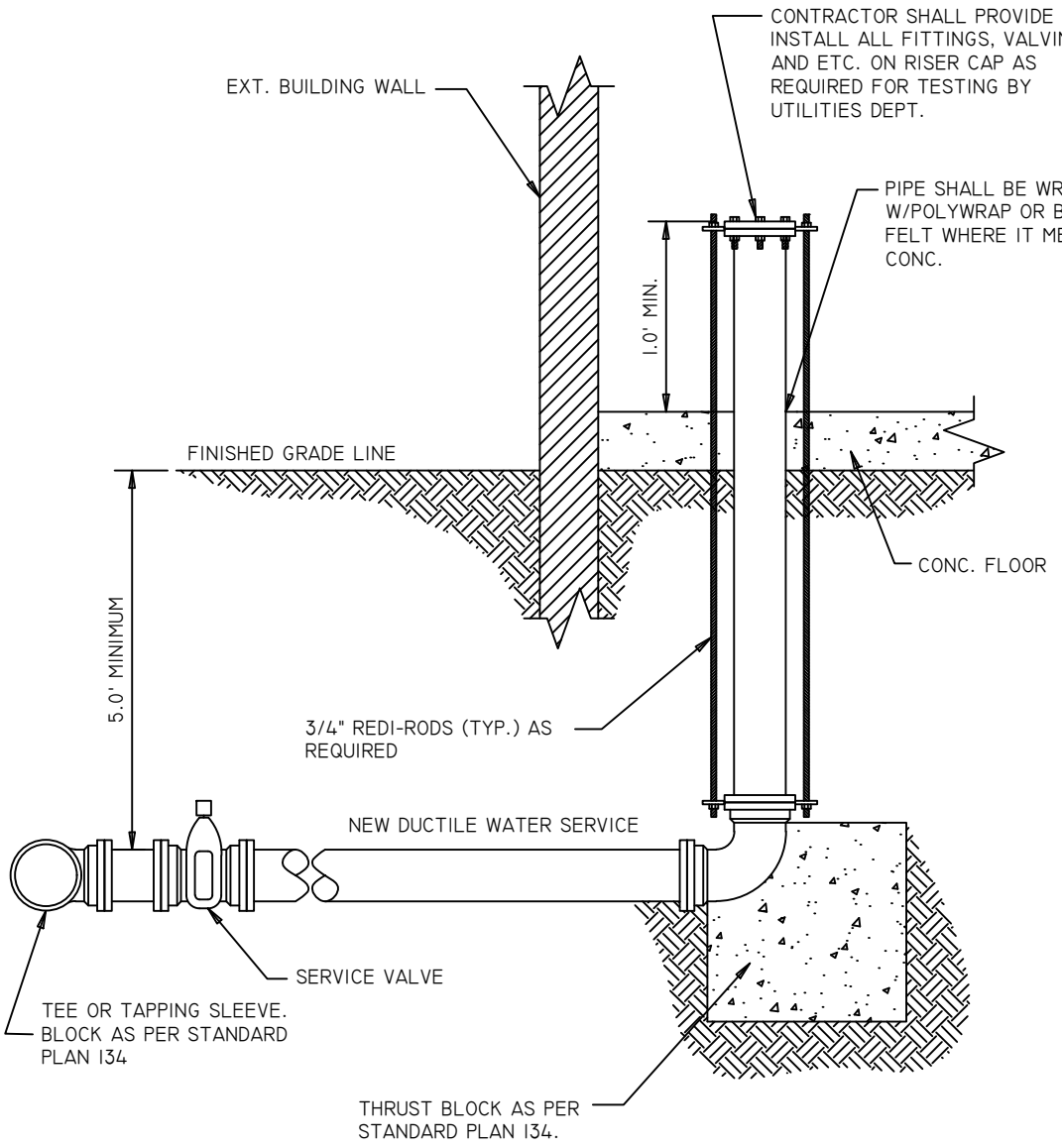

GENERAL NOTES:

1. ALL COMMERCIAL WATER SERVICES LARGER THAN 2" IN DIA. SHALL BE DUCTILE IRON FROM SERVICE VALVE TO METER.

2. DETAILED PLANS FOR NEW AND REPLACEMENT SERVICE LINES SHALL BE PREPARED IN ACCORDANCE WITH THE REQUIREMENTS OF THE "SITE PLAN GUIDELINES FOR PRIVATE DOMESTIC AND PRIVATE FIRE SERVICE MAINS, LARGER THAN 2" DIA." THE WORKING PLANS SHALL BE SUBMITTED FOR REVIEW TO THE AUTHORITY HAVING JURISDICTION BEFORE ANY EQUIPMENT IS INSTALLED OR REMODELED. THE CITY OF GRAND ISLAND UTILITIES DEPARTMENT AND THE CITY OF GRAND ISLAND FIRE DEPARTMENT SHALL BE REFERENCED AS THE AUTHORITY HAVING JURISDICTION (AHJ).

THIS DOCUMENT WAS ORIGINALLY SEALED AND ISSUED BY RYAN L. SCHMITZ E-13818, ON 1-15-2019. THIS MEDIA SHOULD NOT BE CONSIDERED A CERTIFIED DOCUMENT AND SHOULD BE USED FOR REFERENCE ONLY.
PROFESSIONAL ENGINEER
RYAN L. SCHMITZ
E-13818
STATE OF NEBRASKA

CITY OF GRAND ISLAND UTILITIES DEPARTMENT	REVISED: 1/8/2019 DRAWN BY: TDZ CHECKED BY: R.L.S.	SERVICE LINES LARGER THAN 2" DIA.	PLAN 152 2 OF 2

METHOD A

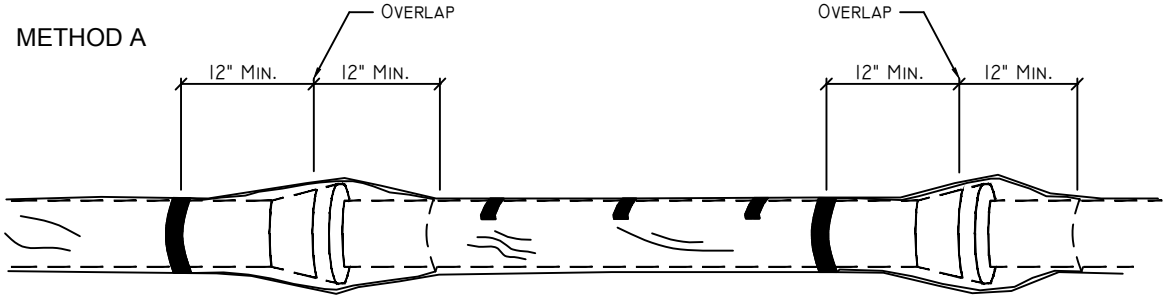

METHOD B

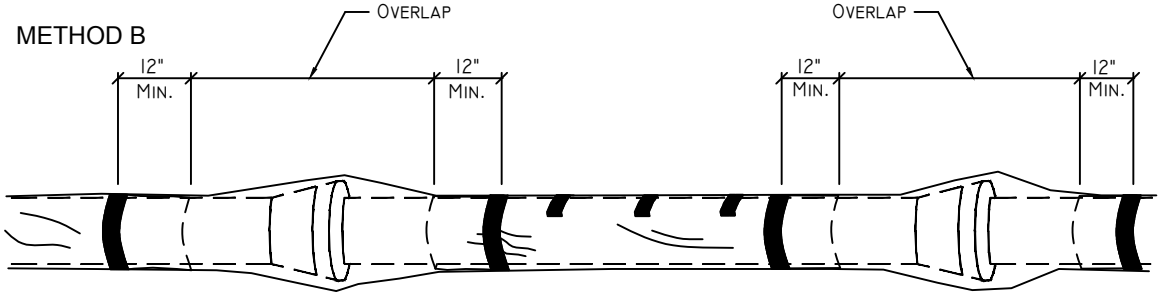

METHOD C

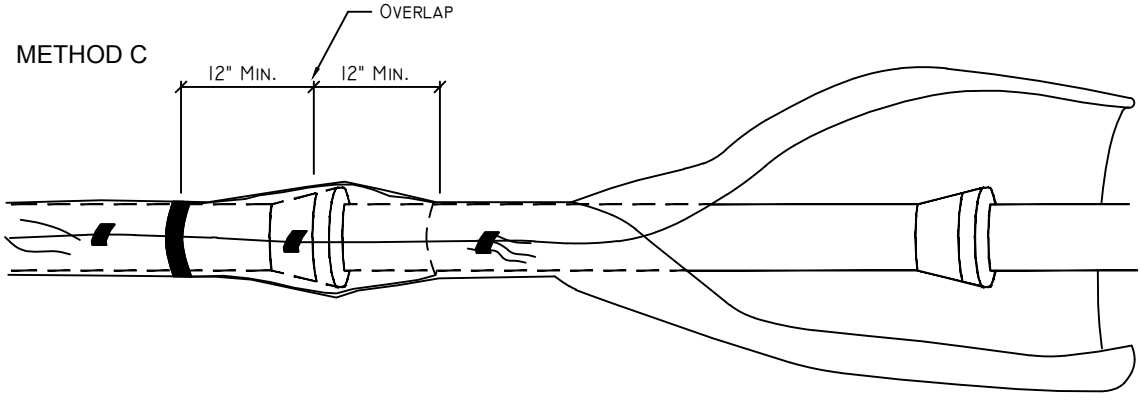

POLYETHYLENE TUBE AND SHEET SIZES NOMINAL THICKNESS OF 0.008 IN. (8 MIL.)		
NOMINAL PIPE DIA. (INCHES)	MIN. POLYETHYLENE WIDTH (INCHES)	
	FLAT TUBE	SHEET
4	16	32
6	20	40
8	24	48
10	27	54
12	30	60
14	34	68
16	37	74
18	41	82
20	45	90
24	54	108
30	67	134
36	81	162

THIS DOCUMENT WAS ORIGINALLY SEALED AND ISSUED BY RYAN L. SCHMITZ E-13818, ON 1-15-2019. THIS MEDIA SHOULD NOT BE CONSIDERED A CERTIFIED DOCUMENT AND SHOULD BE USED FOR REFERENCE ONLY.

PROFESSIONAL ENGINEER
RYAN L. SCHMITZ
E-13818
STATE OF NEBRASKA

CITY OF GRAND ISLAND
UTILITIES DEPARTMENT

REVISED: 1/7/2019
DRAWN BY: T.D.Z.
CHECKED BY: R.L.S.

POLYETHYLENE ENCASEMENT

PLAN 155

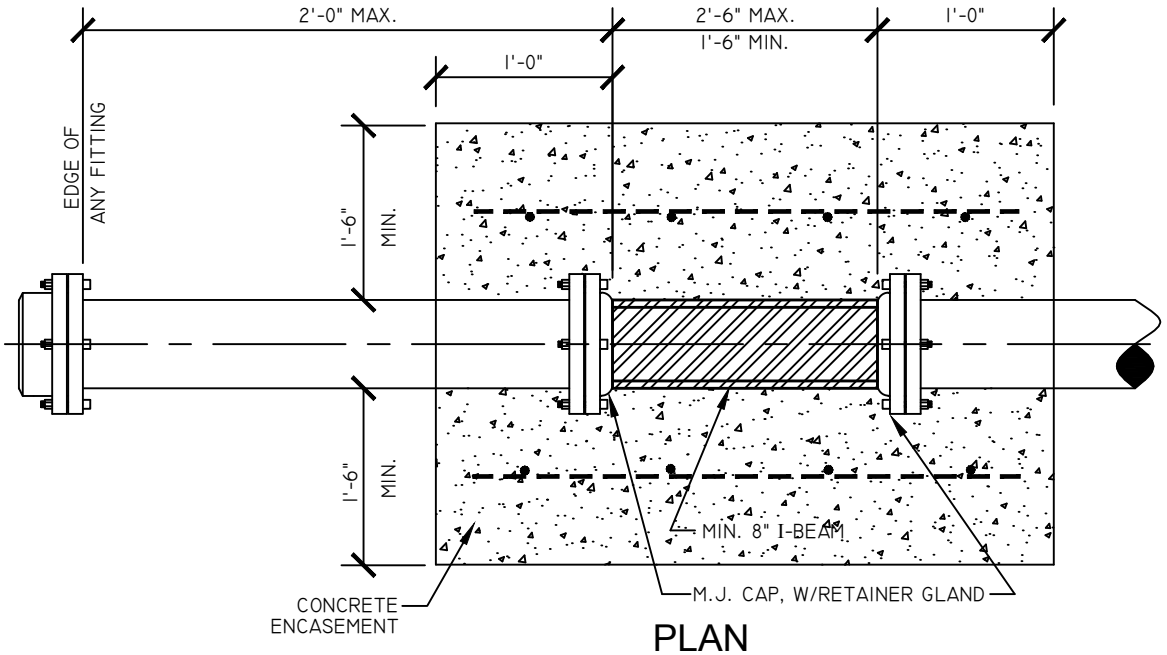

PLAN

NO SCALE

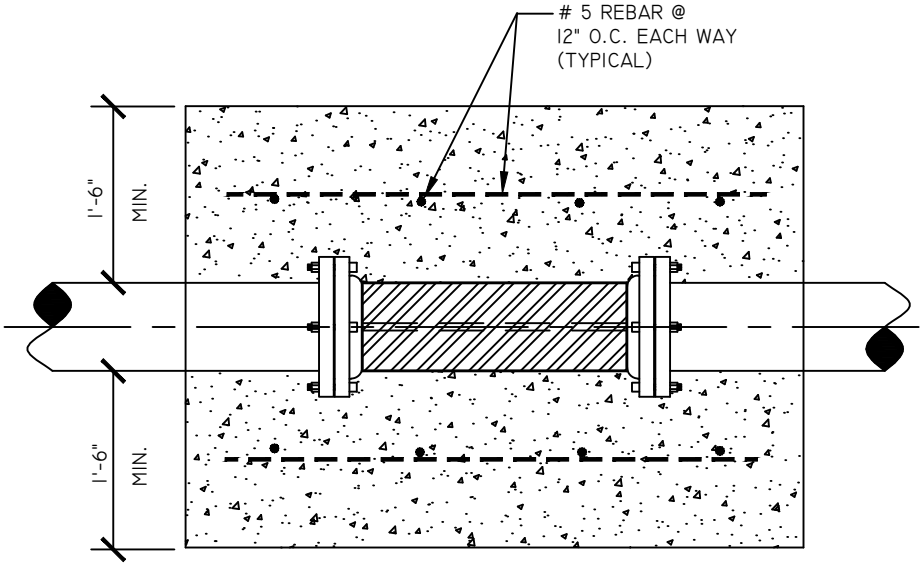

ELEVATION

NO SCALE

THIS DOCUMENT WAS ORIGINALLY SEALED AND ISSUED BY RYAN L. SCHMITZ E-13818, ON 1-15-2019. THIS MEDIA SHOULD NOT BE CONSIDERED A CERTIFIED DOCUMENT AND SHOULD BE USED FOR REFERENCE ONLY.

RYAN L. SCHMITZ E-13818 REGISTERED PROFESSIONAL ENGINEER STATE OF NEBRASKA

GENERAL NOTES

1. ALL THRUST BLOCKS TO BE TYPE 47-B MODIFIED POURED CONCRETE AS PER DIVISION II; "CONCRETE PAVING SPECIFICATIONS"; AND DIVISION VI "WATER MAINS".
2. ALL THRUST BLOCKS ARE TO BE POURED AGAINST UNDISTURBED SOIL.

CITY OF GRAND ISLAND UTILITIES DEPARTMENT	REVISED: 1/8/2019 DRAWN BY: TDZ CHECKED BY: R.L.S.	IN-LINE "I" BEAM BLOCK	PLAN 156

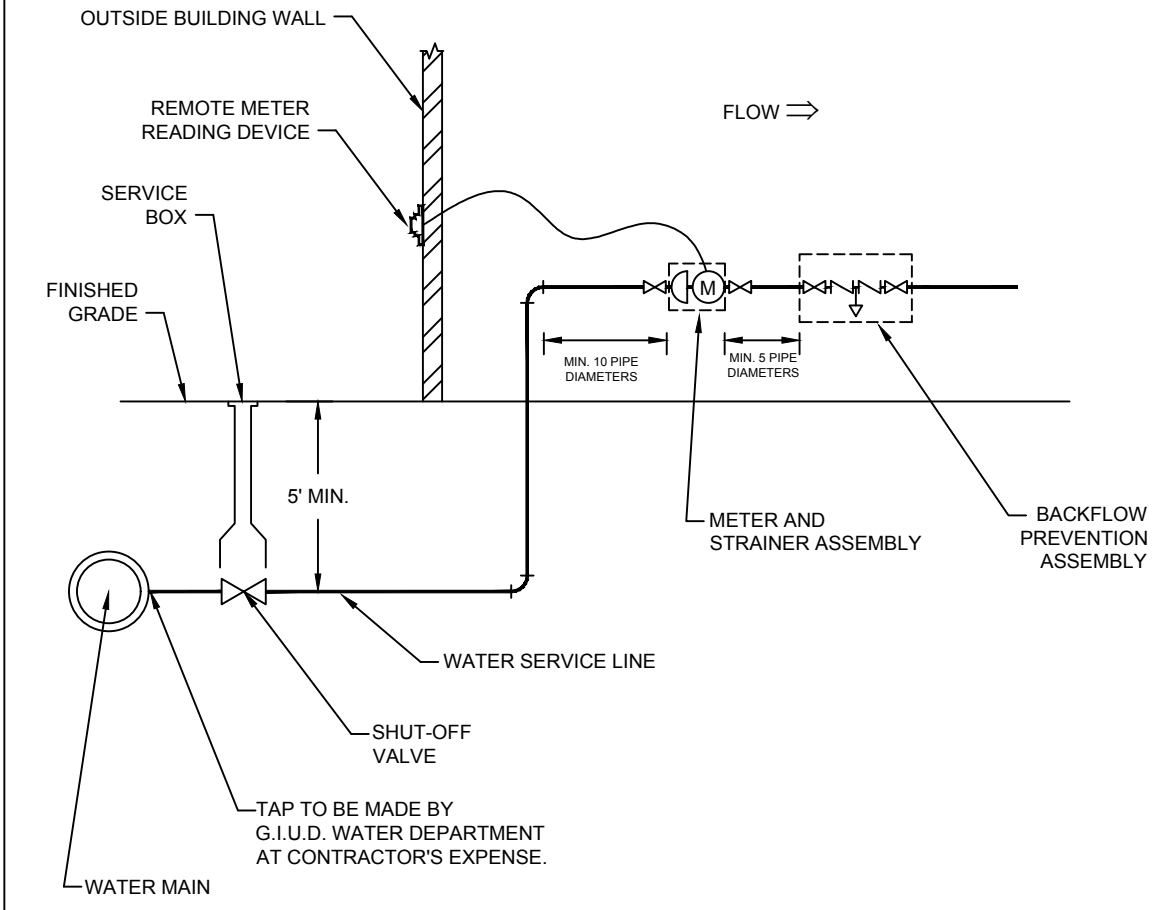

NOTE:
NO ELBOWS, BENDS, NON-CONCENTRIC REDUCERS, CHECK VALVES, BACK FLOW PREVENTERS AND/OR PRESSURE REDUCING DEVICES SHALL BE INSTALLED WITHIN TEN (10) PIPE DIAMETERS UPSTREAM OR FIVE (5) PIPE DIAMETERS DOWNSTREAM OF THE METER SET.

BUTTERFLY VALVES SHALL NOT BE INSTALLED WITHIN FIVE (5) PIPE DIAMETERS UPSTREAM OR THREE (3) PIPE DIAMETERS DOWNSTREAM OF THE METER SET.

FULL PORT BALL VALVES OR GATE VALVES MAY BE INSTALLED IMMEDIATELY UPSTREAM OF THE METER SET, PROVIDED THEY ARE FULLY OPENED AND NOT USED TO THROTTLE FLOW RATES THROUGH THE METER.

ALL OTHER METERING DEVICES SHALL BE INSTALLED DOWNSTREAM OF MAIN WATER METER

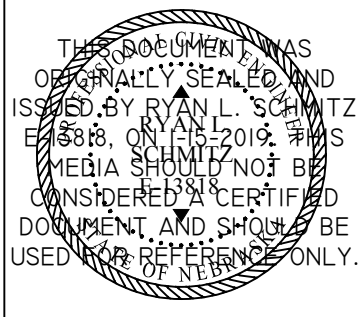

CITY OF GRAND ISLAND UTILITIES DEPARTMENT	REVISED: 1/8/2019 DRAWN BY: TDZ CHECKED BY: R.L.S.	WATER METER AND BACKFLOW PREVENTER INSTALLATION	PLAN 157 1 OF 3

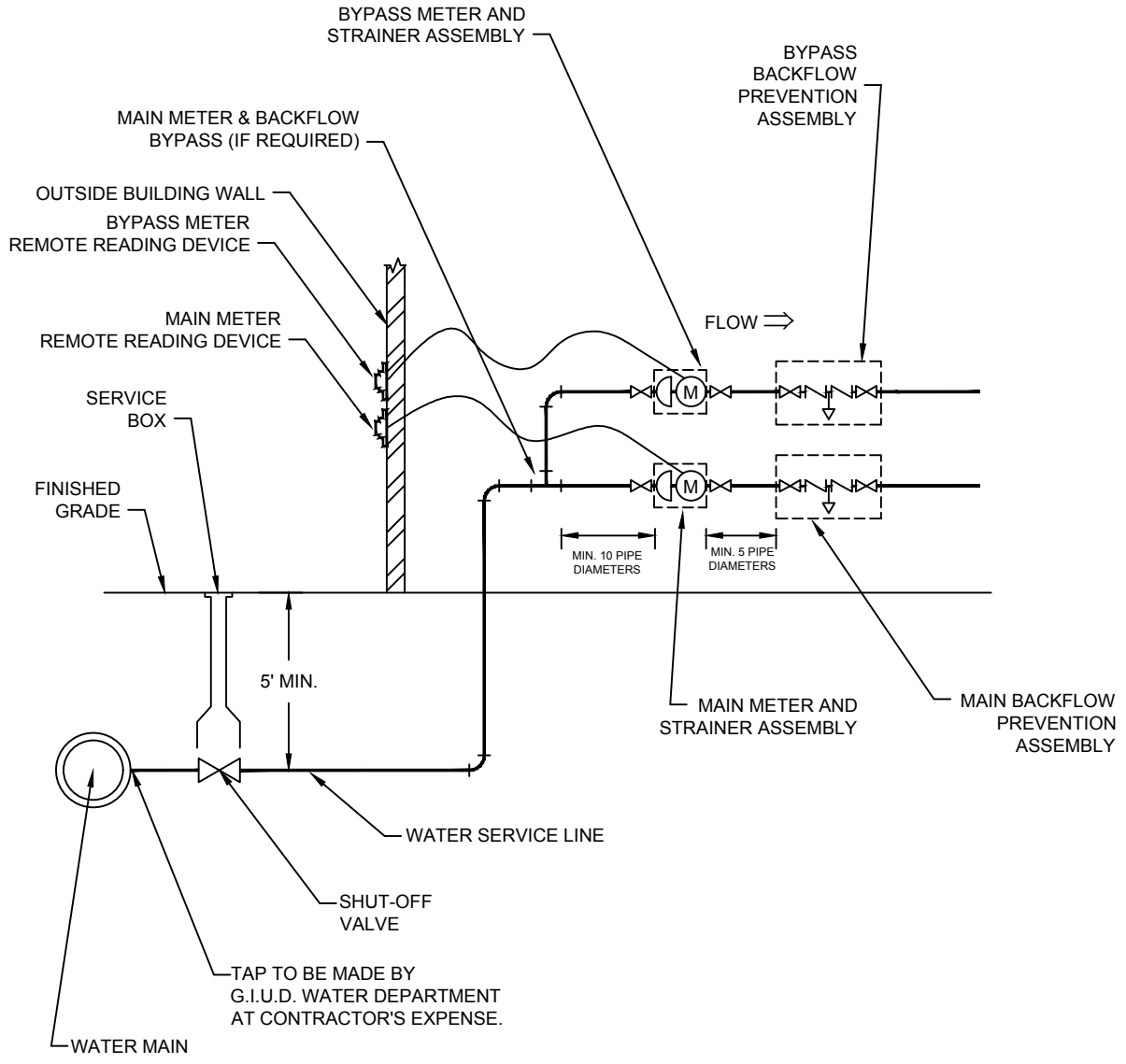

NOTE:
NO ELBOWS, BENDS, NON-CONCENTRIC REDUCERS, CHECK VALVES, BACK FLOW PREVENTERS AND/OR PRESSURE REDUCING DEVICES SHALL BE INSTALLED WITHIN TEN (10) PIPE DIAMETERS UPSTREAM OR FIVE (5) PIPE DIAMETERS DOWNSTREAM OF THE METER SET.

BUTTERFLY VALVES SHALL NOT BE INSTALLED WITHIN FIVE (5) PIPE DIAMETERS UPSTREAM OR THREE (3) PIPE DIAMETERS DOWNSTREAM OF THE METER SET.

FULL PORT BALL VALVES OR GATE VALVES MAY BE INSTALLED IMMEDIATELY UPSTREAM OF THE METER SET, PROVIDED THEY ARE FULLY OPENED AND NOT USED TO THROTTLE FLOW RATES THROUGH THE METER.

THE INSTALLATION OF METER AND BACKFLOW PREVENTER BYPASS LINE SHALL BE APPROVED BY THE WATER DEPARTMENT AND HAVE SEPERATE METER AND BACKFLOW PREVENTER

ALL OTHER METERING DEVICES SHALL BE INSTALLED DOWNSTREAM OF MAIN WATER METER AND BYPASS WATER METER

THIS DOCUMENT WAS ORIGINALLY SEALED AND ISSUED BY RYAN L. SCHMITZ E-13818, ON 1-15-2019. THIS MEDIA SHOULD NOT BE CONSIDERED A CERTIFIED DOCUMENT AND SHOULD BE USED FOR REFERENCE ONLY.
PROFESSIONAL ENGINEER
RYAN L. SCHMITZ
E-13818
STATE OF NEBRASKA

CITY OF GRAND ISLAND UTILITIES DEPARTMENT	REVISED: 1/8/2019 DRAWN BY: TDZ CHECKED BY: R.L.S.	WATER METER AND BACKFLOW PREVENTER INSTALLATION W/BYPASS	PLAN 157 2 OF 3

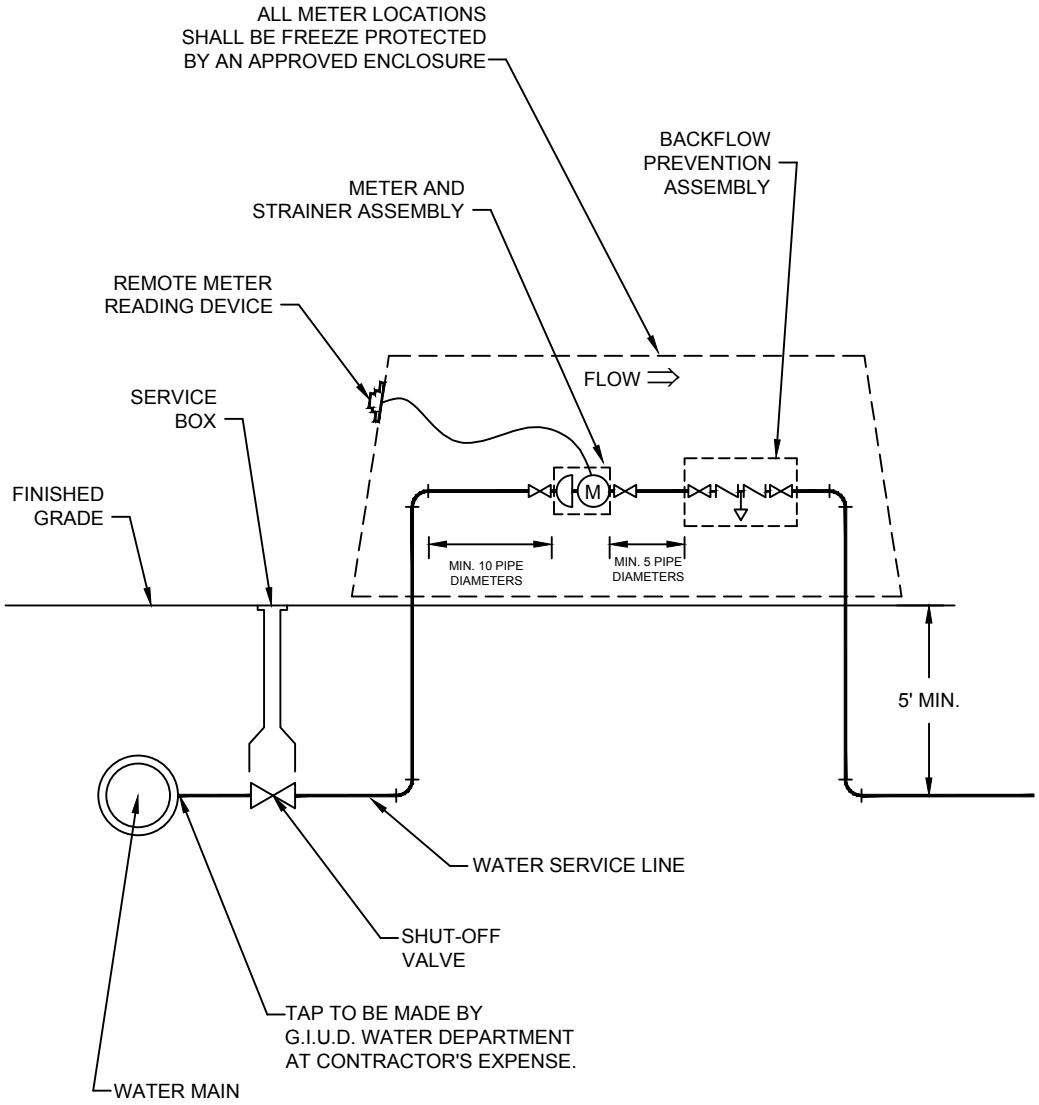

NOTE:
NO ELBOWS, BENDS, NON-CONCENTRIC REDUCERS, CHECK VALVES, BACK FLOW PREVENTERS AND/OR PRESSURE REDUCING DEVICES SHALL BE INSTALLED WITHIN TEN (10) PIPE DIAMETERS UPSTREAM OR FIVE (5) PIPE DIAMETERS DOWNSTREAM OF THE METER SET.

BUTTERFLY VALVES SHALL NOT BE INSTALLED WITHIN FIVE (5) PIPE DIAMETERS UPSTREAM OR THREE (3) PIPE DIAMETERS DOWNSTREAM OF THE METER SET.

FULL PORT BALL VALVES OR GATE VALVES MAY BE INSTALLED IMMEDIATELY UPSTREAM OF THE METER SET, PROVIDED THEY ARE FULLY OPENED AND NOT USED TO THROTTLE FLOW RATES THROUGH THE METER.

ALL OTHER METERING DEVICES SHALL BE INSTALLED DOWNSTREAM OF MAIN WATER METER

THIS DOCUMENT WAS ORIGINALLY SEALED AND ISSUED BY RYAN L. SCHMITZ E-13818, ON 1-15-2019. THIS MEDIA SHOULD NOT BE CONSIDERED A CERTIFIED DOCUMENT AND SHOULD BE USED FOR REFERENCE ONLY.
PROFESSIONAL ENGINEER
RYAN L. SCHMITZ
E-13818
STATE OF NEBRASKA

CITY OF GRAND ISLAND UTILITIES DEPARTMENT	REVISED: 1/8/2019 DRAWN BY: TDZ CHECKED BY: R.L.S.	OUTSIDE INSTALLATION FOR WATER METER AND BACKFLOW PREVENTER	PLAN 157 3 OF 3

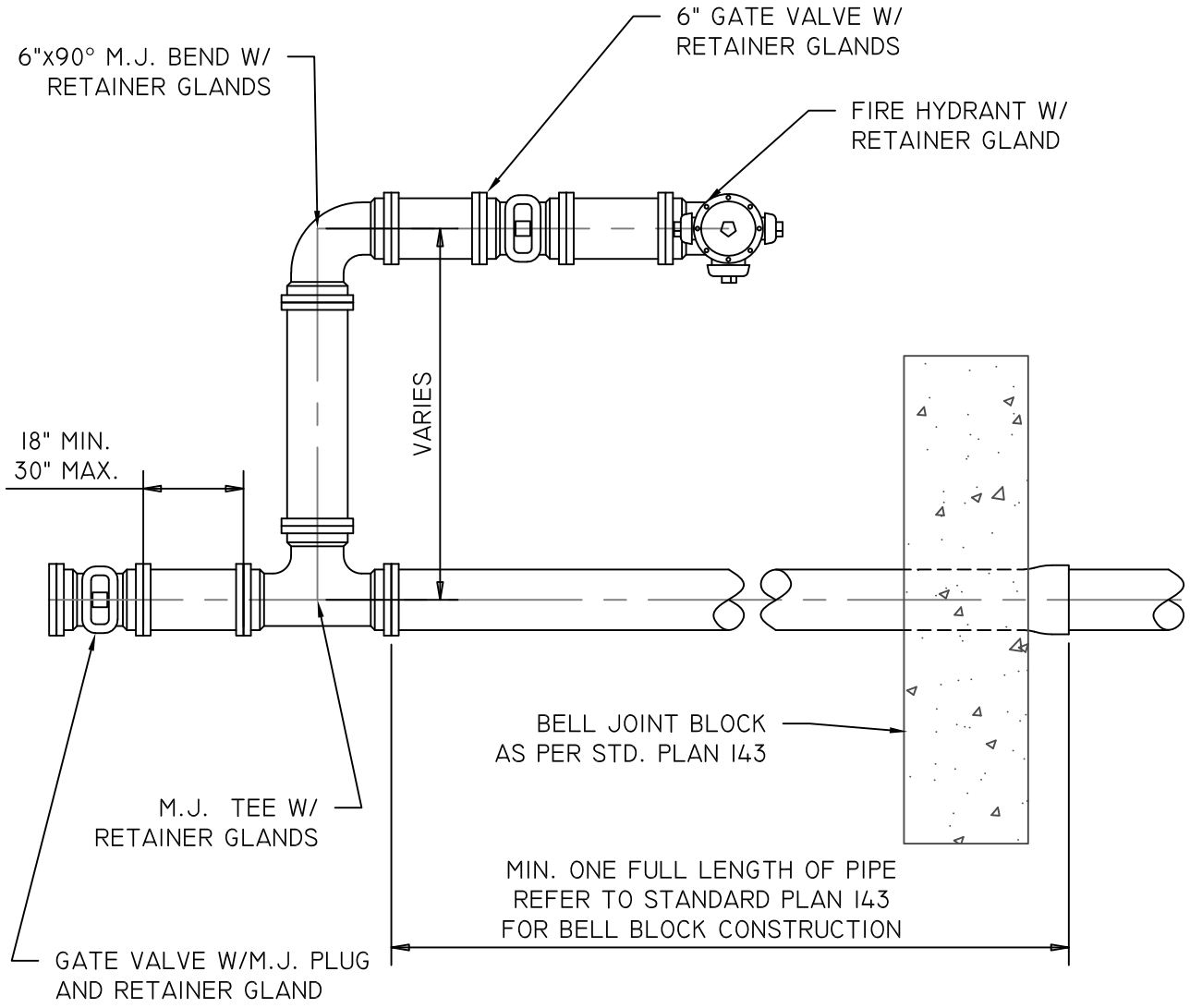

NOTES:

1. REFER TO STANDARD PLAN 140 FOR FIRE HYDRANT ASSEMBLY CONFIGURATIONS.
2. ALL MECHANICAL JOINTS DOWNSTREAM OF THE BELL JOINT BLOCK SHALL BE INSTALLED WITH RETAINER GLANDS
3. NO SLIP JOINTS MAY BE INSTALLED DOWNSTREAM OF THE BELL JOINT BLOCK.

THIS DOCUMENT WAS ORIGINALLY SEALED AND ISSUED BY RYAN L. SCHMITZ E-13818, ON 1-27-2020. THIS MEDIA SHOULD NOT BE CONSIDERED A CERTIFIED DOCUMENT AND SHOULD BE USED FOR REFERENCE ONLY.

CITY OF GRAND ISLAND UTILITIES DEPARTMENT	REVISED: 12/12/2019 DRAWN BY: TDZ CHECKED BY: R.L.S.	FIRE HYDRANT ON DEAD END W/ RESTRAINED JOINTS	PLAN 158

NOTES:

1. ALL THRUST BLOCKS TO BE TYPE 47-B MODIFIED POURED CONCRETE AS PER DIVISION II; "CONCRETE PAVING SPECIFICATIONS"; AND DIVISION VI "WATER MAINS".
2. ALL CONCRETE BLOCKING SHALL BE INSTALLED IN SUCH A MANNER THAT ALL PIPE AND FITTING JOINTS ARE ACCESSIBLE.
3. ALL FITTINGS ARE TO BE WRAPPED IN 8 MIL POLYETHYLENE.
4. ALL THRUST BLOCKS ARE TO BE POURED AGAINST UNDISTURBED SOIL.
5. THE CONTRACTOR SHALL SET OR TURN ALL FIRE HYDRANTS SO THE PUMPER NOZZLE FACES THE DRIVEN ROADWAY OR AS OTHERWISE DIRECTED BY THE UTILITIES DEPARTMENT.
6. WHERE FIRE HYDRANTS ARE LOCATED IN HARD SURFACED AREAS, THE CONTRACTOR SHALL PROVIDE AN 18" BLOCK-OUT AROUND THE HYDRANT BARREL FILLED WITH COMPACTED SOIL.
7. WATER MAINS LARGER THAN 6" DIA. REQUIRE A M.J. REDUCER INSTALLED AFTER THE FULL LENGTH OF PIPE.
8. IF HYDRANT EXTENSIONS ARE REQUIRED, THEY SHALL BE SUPPLIED BY THE CONTRACTOR AND INSTALLED BY THE CITY WATER DEPT. AT THE CONTRACTOR'S EXPENSE. THE METHOD OF ADJ. SHALL HAVE PRIOR APPROVAL OF THE UTILITIES DEPT. AS PER DIVISION VI "WATER MAINS" - SECTION 32.19.

THIS DOCUMENT WAS ORIGINALLY SEALED AND ISSUED BY RYAN L. SCHMITZ E-13818, ON 1-27-2020. THIS MEDIA SHOULD NOT BE CONSIDERED A CERTIFIED DOCUMENT AND SHOULD BE USED FOR REFERENCE ONLY.

CITY OF GRAND ISLAND
UTILITIES DEPARTMENT

REVISED: 12/12/2019
DRAWN BY: TDZ
CHECKED BY: R.L.S.

FIRE HYDRANT ON DEAD END W/ CONC. BLOCKING

PLAN 159

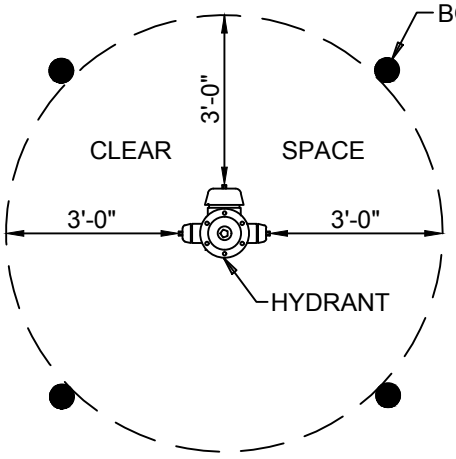

FIRE HYDRANT BOLLARD PROTECTION- TYPE C

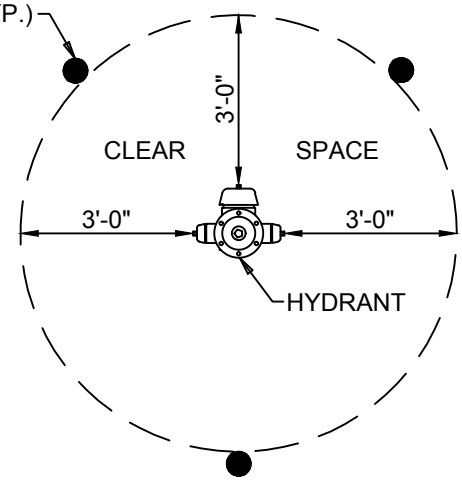

FIRE HYDRANT BOLLARD PROTECTION- TYPE B

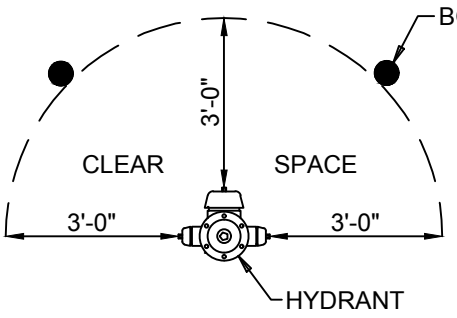

FIRE HYDRANT BOLLARD PROTECTION- TYPE A

NOTE:
PROTECTIVE BOLLARDS SHALL BE PLACED SO THERE IS NO INTERFERENCE WITH THE OPERATION OF THE FIRE HYDRANT OR IT'S AUXILARY VALVE.

TYPE 47-B CONCRETE REQUIRED
VOLUME-1.4 CU. FT.
FILLED WT.-APPROX. 235 LBS. EA.

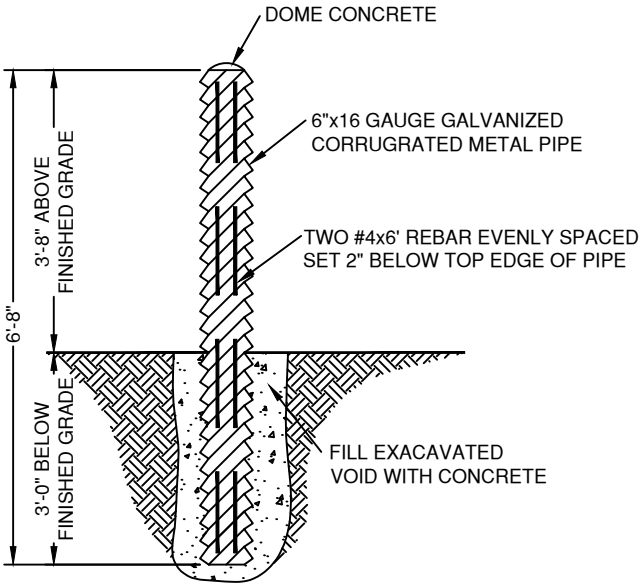

FIRE HYDRANT BOLLARD DETAIL

THIS DOCUMENT WAS ORIGINALLY SEALED AND ISSUED BY RYAN L. SCHMITZ E-13818, ON 1-15-2019. THIS MEDIA SHOULD NOT BE CONSIDERED A CERTIFIED DOCUMENT AND SHOULD BE USED FOR REFERENCE ONLY.
RYAN L. SCHMITZ E-13818
REGISTERED ENGINEER
STATE OF NEBRASKA

CITY OF GRAND ISLAND UTILITIES DEPARTMENT	REVISED: 1/8/2019 DRAWN BY: TDZ CHECKED BY: R.L.S.	FIRE HYDRANT BOLLARD PROTECTION	PLAN 160

5/8"; 3/4"; and 1" WATER METER INSTALLATION

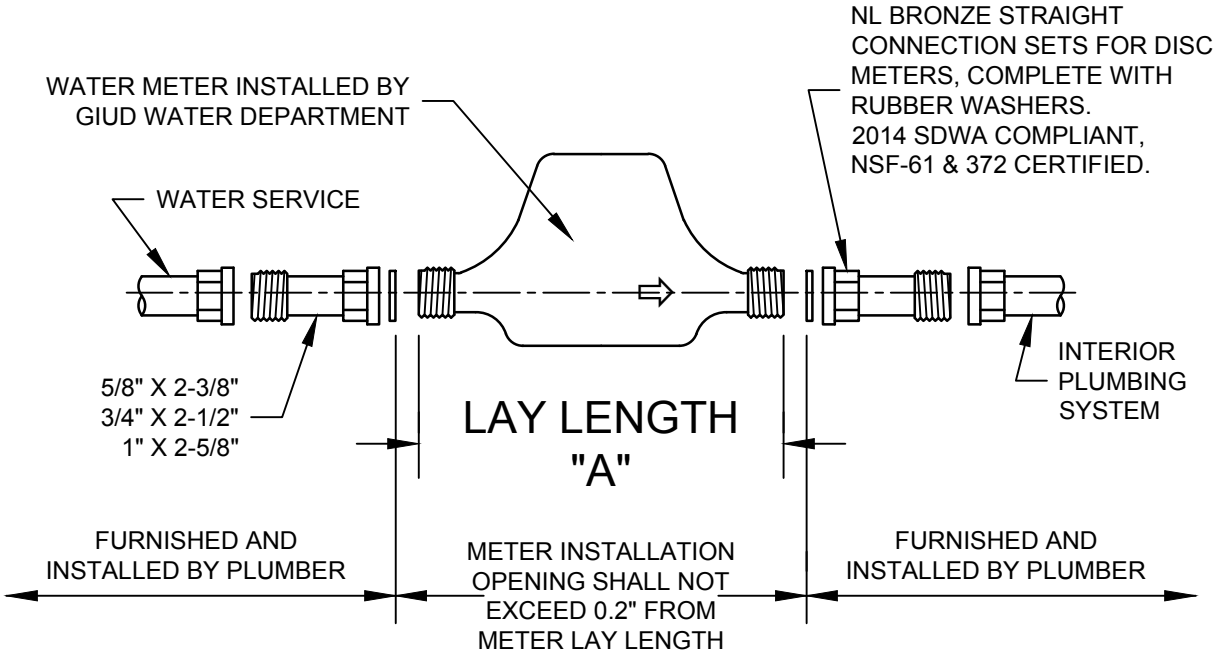

	WATER METER SIZE		
	5/8"	**3/4"**	**1"**
DIMENSION "A"	7-1/2"	9"	10-3/4"

All meters, valves, piping and other appurtenances related to a meter installation are the property of the owner and shall be maintained by the owner. The GIUD Water Department may read, inspect or test a meter at any reasonable time or with such frequency as it deems advisable.

The Plumber shall be responsible for furnishing and installing all appropriate plumbing piping, fittings, couplings, unions, and hardware necessary for the installation of the water meter by the City of Grand Island Water Department, including but not limited to: the appropriate size, lead free, brass water meter unions used to install the water meter. Two unions are required to install one water meter.

Water meters shall be set level and in a horizontal position, at a minimum height of one (1) foot and a maximum height of three (3) feet and as near as possible to the point where the water service enters the building. Meters shall not be exposed to damage by freezing.

THIS DOCUMENT WAS ORIGINALLY SEALED AND ISSUED BY RYAN L. SCHMITZ E-13818, ON 1-15-2019. THIS MEDIA SHOULD NOT BE CONSIDERED A CERTIFIED DOCUMENT AND SHOULD BE USED FOR REFERENCE ONLY
PROFESSIONAL ENGINEER
RYAN L. SCHMITZ
E-13818
STATE OF NEBRASKA

There shall be least 18-inches of clearance above and horizontally around the meter and kept readily accessible. If obstructions exist which interfere with meter installation, reading, testing, maintenance or removal, the GIUD Water Department may discontinue water service until the obstructions are removed.

Valves immediately upstream and downstream of the meter shall only be fully-port ball valves.

CITY OF GRAND ISLAND UTILITIES DEPARTMENT	REVISED: 1/8/2019 DRAWN BY: TDZ CHECKED BY: R.L.S.	5/8"; 3/4"; and 1" Water Meter Installation	PLAN 161

DIMENSIONS OF 1-1/2" AND LARGER METERS WITH INTEGRAL STRAINER

1-1/2" AND 2" METERS

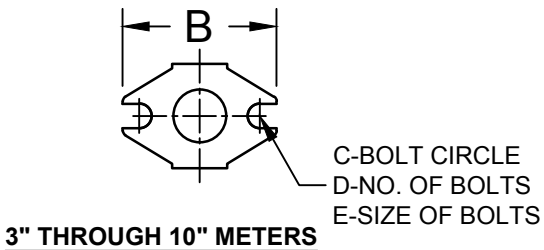

3" THROUGH 10" METERS

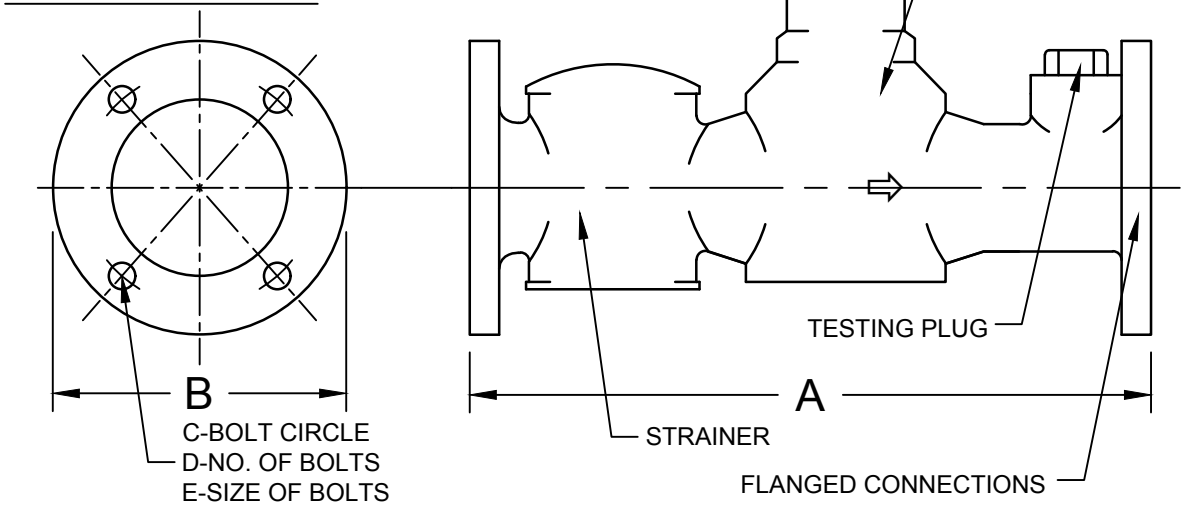

Meter and Pipe Size	A	B	C	D	E
1-1/2"	13"	5-1/8"	4"	2	5/8"
2"	17"	5-3/4"	4-1/2"	2	3/4"
3"	19"	7-7/8"	6"	4	5/8"
4"	23"	9-1/8"	7-1/2"	8	5/8"
6"	27"	11"	9-1/2"	8	3/4"
8"	30-1/8"	13-1/2"	11-3/4"	8	3/4"
10"	41-1/8"	16"	14-1/4"	12	7/8"

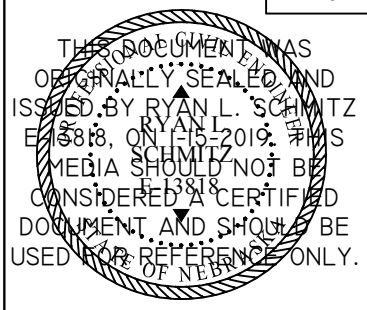

CITY OF GRAND ISLAND UTILITIES DEPARTMENT	REVISED: 1/8/2019 DRAWN BY: TDZ CHECKED BY: R.L.S.	1-1/2" and Larger Water Meter Installation	PLAN 162 1 OF 2

INSTALLATION REQUIREMENTS FOR 1-1/2" AND LARGER METERS WITH INTEGRAL STRAINER

All meters, valves, piping and other appurtenances related to a meter installation are the property of the owner and shall be maintained by the owner. The GIUD Water Department may read, inspect or test a meter at any reasonable time or with such frequency as it deems advisable.

The Plumber shall be responsible for furnishing and installing all appropriate plumbing piping, fittings, couplings, unions, flanges, and hardware necessary for the installation of the water meter by the City of Grand Island Water Department.

Meters 1-1/2 inches and larger are not be suspended nor supported by the piping. The Plumber shall be responsible for furnishing and installing the appropriate size meter supports.

Water meters shall be set level and in a horizontal position, at a minimum height of one (1) foot and a maximum height of three (3) feet and as near as possible to the point where the water service enters the building. Meters shall not be exposed to damage by freezing.

There shall be least eighteen (18) inches of clearance above and horizontally around the meter and kept readily accessible. If obstructions exist which interfere with meter installation, reading, testing, maintenance or removal, the GIUD Water Department may discontinue water service until the obstructions are removed.

One and one half (1-1/2) inch through ten (10) inch meters shall have an integral strainer, and shall be installed with a minimum of five (5) pipe diameters of straight run of pipe or equivalent full open components upstream of the meter-strainer flange; and with a minimum of two and one half (2.5) pipe diameters of straight run of pipe or equivalent full open components downstream of the meter flange. Full open flow components may consist of: straight pipe, full open gate valves, bypass tees and concentric reducers (1 nominal pipe size reduction only).

Fully open gate valves may be located immediately upstream or downstream, provided they are not used to throttle flow rates through the meter.

Install non-concentric reducers, check valves, backflow preventers, PRV (pressure reducing valves), throttling devices, or altitude valves no closer than four (4) pipe diameters downstream of the meter.

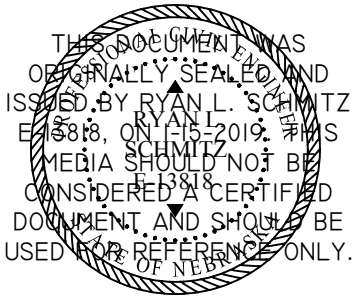

CITY OF GRAND ISLAND UTILITIES DEPARTMENT	REVISED: 1/8/2019 DRAWN BY: TDZ CHECKED BY: R.L.S.	1-1/2" and Larger Water Meter Installation	PLAN 162 2 OF 2

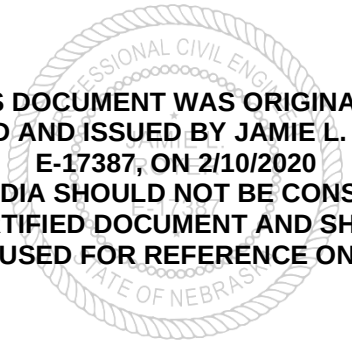

THIS DOCUMENT WAS ORIGINALLY SEALED AND ISSUED BY JAMIE L. ROYER E-17387, ON 2/10/2020
THIS MEDIA SHOULD NOT BE CONSIDERED A CERTIFIED DOCUMENT AND SHOULD BE USED FOR REFERENCE ONLY.

WATER MAIN PROJECT 2020-W-5
CONSTRUCTION PLANS

CITY OF GRAND ISLAND

UTILITIES DEPARTMENT

WATER MAIN PROJECT 2020-W-5

PLEASANT VIEW DR CONFLICTS

GENERAL NOTES

1.) THE LOCATION OF ALL UTILITIES SHOWN ON THE PLANS IS APPROXIMATE. THE CONTRACTOR SHALL BE RESPONSIBLE FOR VARIFYING THE LOCATION OF ALL EXISTING UTILITIES PRIOR TO ANY EXCAVATION.

2.) THE CONTRACTOR SHALL COORDINATE WITH THE CITY OF GRAND ISLAND UTILITY DEPARTMENT ANY WORK IN CONFLICT WITH EXISTING OVERHEAD OR UNDERGROUND ELECTRIC LINES.

3.) ALL WORK SHALL BE DONE IN ACCORDANCE WITH THE CITY OF GRAND ISLAND STANDARD PLANS AND SPECIFICATIONS.

4.) ALL WATER MAIN TAPS SHALL BE PERFORMED BY THE CITY OF GRAND ISLAND WATER DEPARTMENT. CONTRACTOR SHALL COORDINATE SCHEDULING OF TAPS WITH THE UTILITIES DEPT. REPRESENTATIVE. THERE WILL BE NO CHARGE TO THE CONTRACTOR FOR THE TAPPING OF THE MAIN. THE CONTRACTOR SHALL PROVIDE THE NECESSARY MATERIALS AS SHOWN ON THE PLANS.

5.) THE CONTRACTOR SHALL BE RESPONSIBLE FOR THE COORDINATION OF ALL TESTING PROCEDURES REQUIRED.

6.) AT THE COMPLETION OF WORK AND BEFORE FINAL ACCEPTANCE ALL SALVAGED MATERIAL SHALL BE RETURNED TO THE CITY OF GRAND ISLAND WATER DEPARTMENT.

7.) THE CONTRACTOR SHALL PROVIDE AND MAINTAIN EROSION CONTROL MEASURES DURING ALL PHASES OF CONSTRUCTION AND SHALL SUBMIT TO THE UTILITIES DEPARTMENT AN EROSION CONTROL PLAN PRIOR TO ANY CONSTRUCTION.

8.) THE FIRE HYDRANTS SHALL BE PROVIDED BY THE CITY AND WILL BE AVAILABLE FOR PICK-UP AT THE CITY OF GRAND ISLAND WATER DEPT LOCATED AT 370 N. PINE ST., GRAND ISLAND, NE.

9.) THE CONTRACTOR SHALL BE RESPONSIBLE TO NOTIFY PROPERTY OWNERS A MINIMUM OF SEVEN DAYS PRIOR TO ANY CONSTRUCTION.

10.) THE REMOVAL OF TREES, BUSHES, SCHRUBS, LANDSCAPING AND ETC... SHALL BE CONSIDERED SUBSIDIARY TO THE INSTALLATION OF THE WATER MAIN.

11.) REMOVAL OF EXISTING SURFACING SHALL BE DONE BY SAW CUTTING ALONG EXISTING JOINT LINES. SAW CUTTING SHALL BE CONSIDERED SUBSIDIARY TO THE REMOVAL OF THE SURFACING.

12.) TWO SETS OF SAMPLES SHALL BE TAKEN FOR BACTERIOLOGICAL ANALYSIS 24 HOURS APART. HETEROTROPHIC PLATE COUNT TESTS WILL NO LONGER BE TAKEN. REFER TO CITY OF GRAND ISLAND SPECIFICATIONS, DIVISION VI, SEC. 32.10.

13.) THERE WILL BE NO CHARGE TO THE CONTRACTOR FOR THE FIRST CHLORINATION AND FIRST ROUND OF BACTERIOLOGICAL SAMPLING OF EACH INDIVIDUAL PHASE OF PIPING. ANY SUBSEQUENT CHLORINATIONS AND SAMPLING SHALL BE AT THE CONTRACTOR'S EXPENSE AS PER DIVISION VI OF THE CITY OF GRAND ISLAND SPECIFICATIONS.

SHEET INDEX

SHEET 1 OF X - COVER SHEET

SHEET 2 OF 6 - GENERAL INFORMATION STANDARD SPECS.

SHEET 3 OF 6 - GENERAL INFORMATION STANDARD SPECS.

SHEET 4 OF 6 - PLAN AND PROFILE PHOENIX AVE.

SHEET 5 OF 6 - PLAN AND PROFILE DELAWARE AVE.

SHEET 6 OF 6 - TRAFFIC CONTROL PLAN

LOCATION MAP — PROJECT LOCATIONS

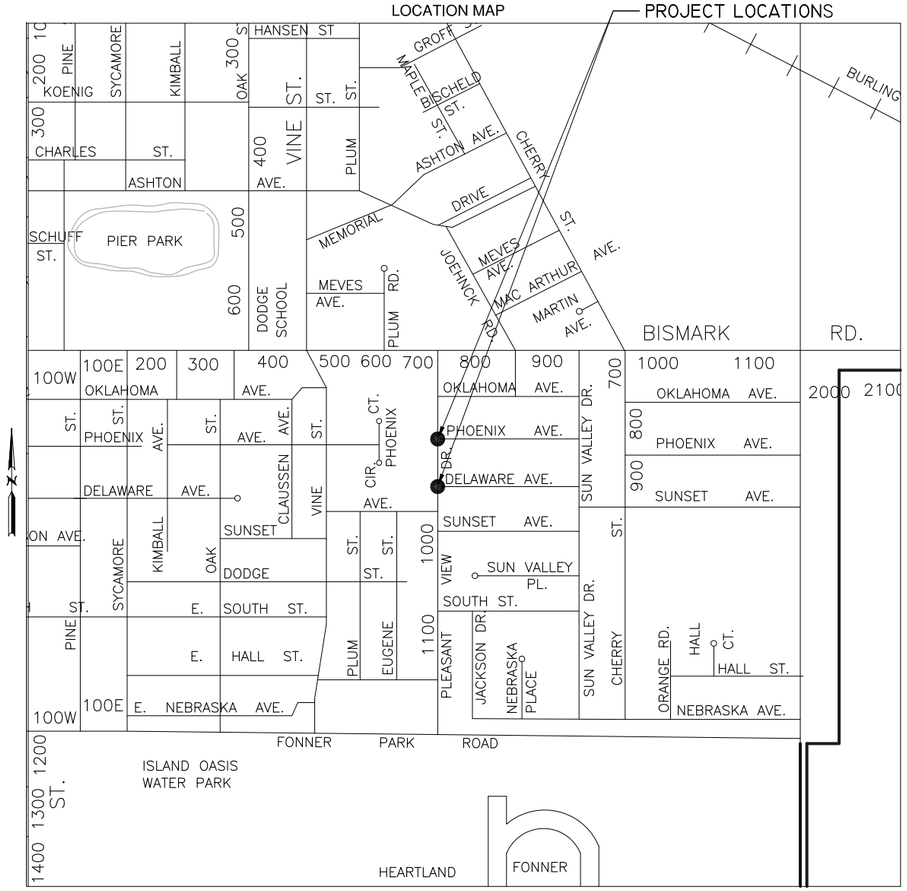

QUANTITY ESTIMATE		
ITEM	UNIT	QTY.
6" S.J. D.I.P.	L.F.	117.3
6" X 6" M.J. TEE	EA.	1
6" GATE VALVE	EA.	5
6"X45° M.J. BEND	EA.	8
6" RETAINER GLAND	EA.	16
DUC-LUGS AND REDI-ROD	SETS	4
VALVE BOX	EA.	3
6" SLEEVE COUPLING	EA.	3
8 MIL POLYWRAP	L.F.	117.3
THRUST BLOCK	EA.	9
FIRE HYDRANT	EA.	1
6" X 24" M.J. OFFSET FITTING W/RESTRAINED JOINT	EA.	1
ABANDON VALVE IN PLACE	EA.	1
REMOVE SALVAGE AND REUSE VALVE BOX	EA.	2
REMOVE AND SALVAGE VALVE	EA.	1
REMOVE EXISTING WATER MAIN	L.F.	83
ABANDON EXISTING WATER MAIN INSIDE MANHOLE	EA.	2
REMOVE CURB AND GUTTER	L.F.	114.3
REPLACE CURB AND GUTTER	L.F.	114.3
REMOVE CONCRETE ROADWAY	S.Y.	248.8
REPLACE CONCRETE ROADWAY	S.Y.	248.8
REMOVE SIDEWALK	S.F.	398.1
REPLACE SIDEWALK	S.F.	398.1
ADA RAMP AT DELAWARE TYPE 2	L.S.	2
SODDING	S.F.	332.4
DEWATERING	L.S.	2
TRAFFIC CONTROL	L.S.	2

COORDINATE SYSTEM & ZONE
COORDINATE SYSTEM: NE COUNTIES COORD. SYSTEM
ZONE: HALL
VERT. DATUM: NAVD-88

APPROVALS: WATER MAIN PROJECT 2020-W-5:

APPROVED
GRAND ISLAND FIRE DEPT.

APPROVED
GRAND ISLAND PUBLIC WORKS DEPT.

APPROVED — 02-07-2020
UTILITIES DIRECTOR — DATE

811 Know what's below. Call before you dig.

GRAND ISLAND UTILITIES DEPT. - ENGINEERING DIV.
315 N. JEFFERSON ST.
GRAND ISLAND, NE., 68801
PH.: 308-385-54[redacted]

GRAND ISLAND WATER DEPT.
370 N. PINE ST.
GRAND ISLAND, NE., 68801

THIS DOCUMENT WAS ORIGINALLY ISSUED AND SEALED BY JAMIE L. ROYER, P.E. ON 07-[redacted] AND THE ORIGINAL DOCUMENT MAY BE FOUND IN THE OFFICE OF THE CITY ENGINEER. ELECTRONIC COPIES OF THIS DOCUMENT ARE NOT TO BE USED FOR CONSTRUCTION PURPOSES.

REVISIONS			
DATE	BY	DESCRIPTION	SURV. BY: T.J.Y.
			DATE: 03/28/19
			DR. BY: T.J.Y.
			DATE: 05/08/19
			CHK. BY: J.R.
			DATE:02/07/20
			APPR. BY:
			DATE:
			HORZ.:
			VERT.:

CITY OF GRAND ISLAND
UTILITIES DEPARTMENT

WATER MAIN PROJECT 2020-W-5
PLEASANT VIEW DR SEWER CONFLICTS
COVER SHEET

DRAWING NO.: F-482 — 1 / 6

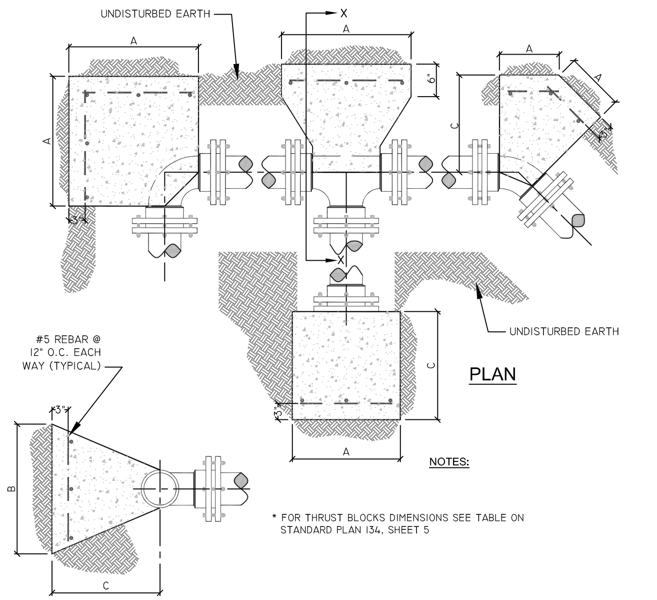

HORIZONTAL BLOCKING FOR FITTINGS

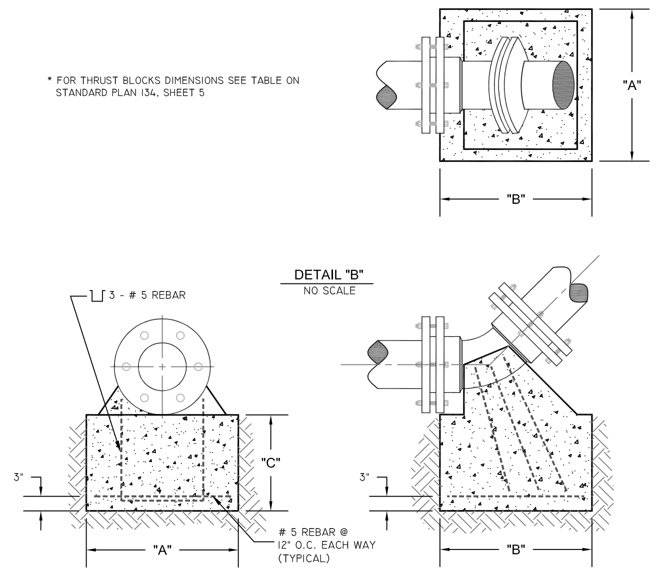

BLOCKING FOR VERTICAL UP BLOCKS

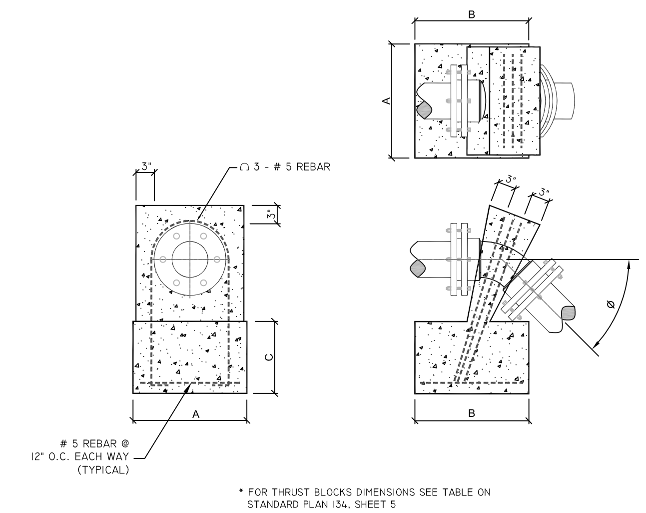

BLOCKING FOR 4"-10" GRAVITY BLOCKS

HORIZONTAL AND VERTICAL UP BLOCK DIMENSIONS
DESIGN PRESSURE - 200 PSI SOIL TYPE - SANDY SILT (2000 LBS/SF)

PIPE DIA.	TEES & PLUGS			90° BENDS			45° BENDS			22-1/2° BENDS			11-1/4° BENDS		
	A	B	C	A	B	C	A	B	C	A	B	C	A	B	C
4	16	16	18	19	19	18	14	14	18	12	12	18	12	12	18
6	23	23	20	28	28	20	20	20	20	14	14	20	12	12	20
8	30	30	22	36	36	22	27	27	22	19	19	22	13	13	22
10	37	37	24	44	44	24	33	33	24	23	23	24	17	17	24
12	44	44	26	53	53	26	39	39	26	28	28	26	20	20	26
14	51	51	29	61	61	29	45	45	29	32	32	29	23	23	29
16	59	59	31	70	70	31	51	51	31	37	37	31	26	26	31
18	66	66	33	78	78	33	57	57	33	41	41	33	29	29	33
20	73	73	36	86	86	36	64	64	36	45	45	36	32	32	36

ALL DIMENSIONS ARE IN INCHES

GRAVITY BLOCK DIMENSIONS
DESIGN PRESSURE - 200 PSI SOIL TYPE - SANDY SILT (2000 LBS/SF)

PIPE DIA.	45° BENDS A	B	C	D	E	F	G	H	C.Y.	PIPE DIA.	22-1/2° BENDS A	B	C	D	E	F	G	H	C.Y.
4	35	35	24	X	X	X	X	X	0.63	4	26	26	24	X	X	X	X	X	0.34
6	50	50	24	X	X	X	X	X	1.31	6	37	37	24	X	X	X	X	X	0.71
8	66	66	24	X	X	X	X	X	2.25	8	49	49	24	X	X	X	X	X	1.22
10	72	72	30	X	X	X	X	X	3.38	10	53	53	30	X	X	X	X	X	1.83
12	36	80	30	24	18	12	12	21	4.78	12	36	54	30	27	18	12	15	21	2.59
14	36	94	30	27	18	12	15	27	6.42	14	36	65	30	27	18	12	15	27	3.47
16	36	108	30	33	18	12	18	33	8.30	16	36	76	30	33	18	12	18	33	4.49
18	42	121	30	36	18	12	20	37	10.43	18	42	85	30	36	18	12	20	37	5.64
20	48	135	30	36	18	12	20	37	12.80	20	48	95	30	36	18	12	20	37	6.92

ALL DIMENSIONS ARE IN INCHES (C.Y. = CUBIC YARDS OF CONCRETE REQUIRED)

NOTES :

1. ALL THRUST BLOCKS TO BE TYPE 47-B MODIFIED POURED CONCRETE AS PER DIVISION II; "CONCRETE PAVING SPECIFICATIONS"; AND DIVISION VI "WATER MAINS".
2. ALL CONCRETE BLOCKING SHALL BE INSTALLED IN SUCH A MANNER THAT ALL PIPE AND FITTING JOINTS ARE ACCESSIBLE.
3. ALL FITTINGS ARE TO BE WRAPPED IN 8 MIL POLYETHYLENE.
4. ALL THRUST BLOCKS ARE TO BE POURED AGAINST UNDISTURBED SOIL.
5. ALL REINFORCING STEEL SHALL BE DEFORMED BARS CONFORMING TO A.S.T.M. A-305-507 AND SATISFY THE BENT TEST REQUIREMENTS FOR STRUCTURAL GRADE STEEL.
6. IF SOIL OTHER THAN SANDY SOIL IS DISCOVERED DURING EXCAVATION, THE THRUST BLOCK SIZE SHALL BE VERIFIED BY THE ENGINEER.
7. TAPPING SLEEVES SHALL BE TREATED AS A TEE AND BLOCKED ACCORDINGLY.

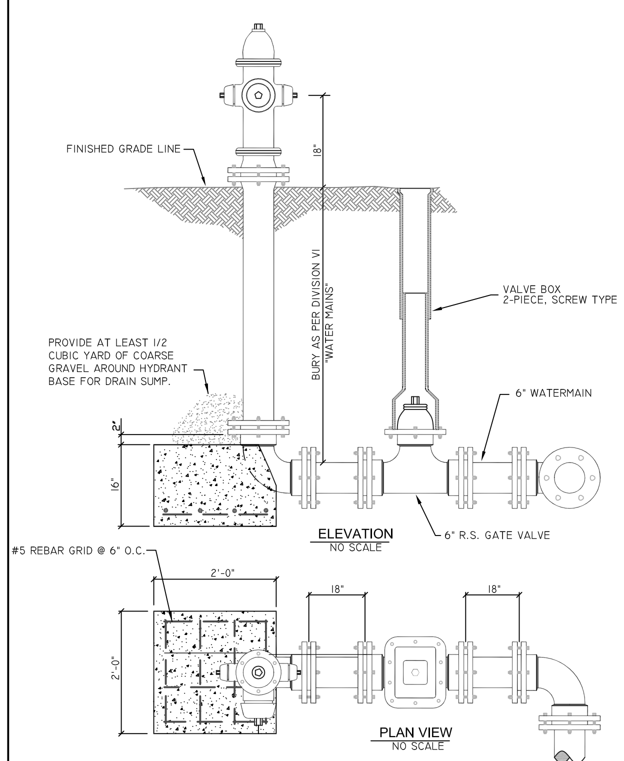

FIRE HYDRANT BLOCKING

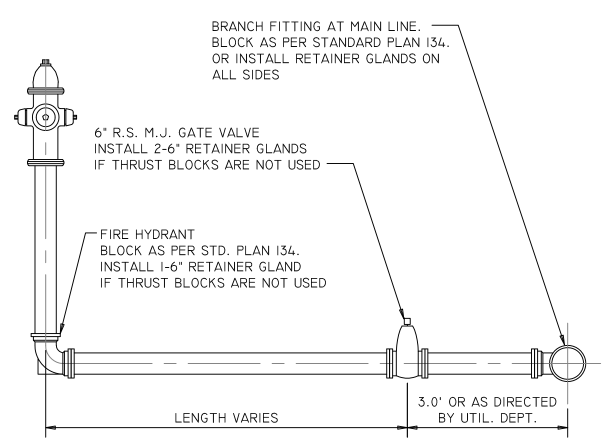

NOTES:

1. IF RETAINER GLANDS ARE INSTALLED ON ALL JOINTS AND THRUST BLOCKS ARE NOT USED DOWNSTREAM OF THE BRANCH FITTING, RETAINER GLANDS SHALL BE INSTALLED ON ALL SIDES OF THE BRANCH FITTING. THE USE OF RETAINER GLANDS IN PLACE OF THRUST BLOCKS SHALL BE AT THE DISCRETION OF THE UTILITIES DEPT.
2. EACH FIRE HYDRANT INSTALLATION SHALL BE ITEMIZED FOR PAYMENT AT CONTRACT UNIT PRICES FOR ALL INDIVIDUAL MATERIAL AND FITTINGS REQUIRED TO COMPLETE THE ASSEMBLY.
3. THE CONTRACTOR SHALL SET OR TURN ALL FIRE HYDRANTS SO THE PUMPER NOZZLE FACES THE DRIVEN ROADWAY OR AS OTHERWISE DIRECTED BY THE UTILITIES DEPARTMENT.
4. WHERE FIRE HYDRANTS ARE LOCATED IN A HARD SURFACED ISLAND OR PARKING AREA, THE CONTRACTOR SHALL PROVIDE AN 18" BLOCK-OUT AROUND THE HYDRANT BARREL FILLED WITH COMPACTED SOIL.
5. FIRE HYDRANTS SHALL BE INSTALLED A MINIMUM OF 18" FROM THE EDGE OF ANY SIDEWALK AND A MINIMUM OF 6' FROM ANY DRIVING LANE.
6. FIRE HYDRANT SHALL BE SET ON COMMON PAVER BLOCK TO ESTABLISH CORRECT ELEVATION.

FIRE HYDRANT TYPICAL
INSTALLATION TYPE 1

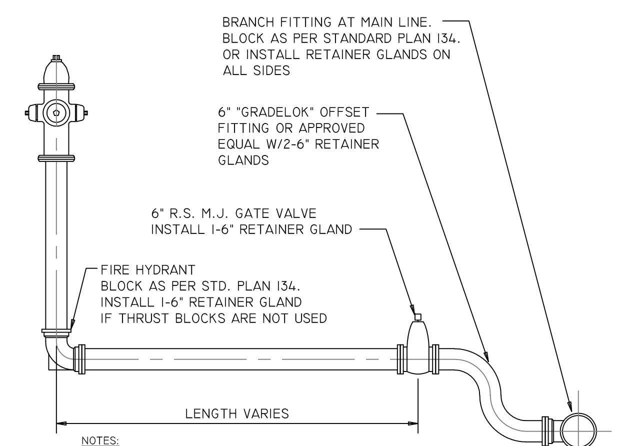

NOTES:

1. IF RETAINER GLANDS ARE INSTALLED ON ALL JOINTS AND THRUST BLOCKS ARE NOT USED DOWNSTREAM OF THE BRANCH FITTING, RETAINER GLANDS SHALL BE INSTALLED ON ALL SIDES OF THE BRANCH FITTING. THE USE OF RETAINER GLANDS IN PLACE OF THRUST BLOCKS SHALL BE AT THE DISCRETION OF THE UTILITIES DEPT.
2. EACH FIRE HYDRANT INSTALLATION SHALL BE ITEMIZED FOR PAYMENT AT CONTRACT UNIT PRICES FOR ALL INDIVIDUAL MATERIAL AND FITTINGS REQUIRED TO COMPLETE THE ASSEMBLY.
3. THE CONTRACTOR SHALL SET OR TURN ALL FIRE HYDRANTS SO THE PUMPER NOZZLE FACES THE DRIVEN ROADWAY OR AS OTHERWISE DIRECTED BY THE UTILITIES DEPARTMENT.
4. WHERE FIRE HYDRANTS ARE LOCATED IN A HARD SURFACED ISLAND OR PARKING AREA, THE CONTRACTOR SHALL PROVIDE AN 18" BLOCK-OUT AROUND THE HYDRANT BARREL FILLED WITH COMPACTED SOIL.
5. FIRE HYDRANTS SHALL BE INSTALLED A MINIMUM OF 18" FROM THE EDGE OF ANY SIDEWALK AND A MINIMUM OF 6' FROM ANY DRIVING LANE.
6. FIRE HYDRANT SHALL BE SET ON COMMON PAVER BLOCK TO ESTABLISH CORRECT ELEVATION.
7. FITTINGS AND ETC... FOR VERTICAL ADJUSTMENT MAY USED DOWNSTREAM OF THE HYDRANT AUXILARY VALVE WITH APPROVAL OF THE UTILITIES DEPT.

FIRE HYDRANT TYPICAL
INSTALLATION TYPE 2

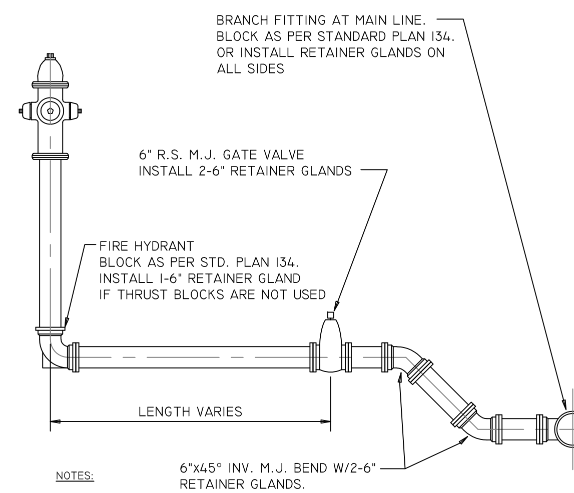

NOTES:

1. IF RETAINER GLANDS ARE INSTALLED ON ALL JOINTS AND THRUST BLOCKS ARE NOT USED DOWNSTREAM OF THE BRANCH FITTING, RETAINER GLANDS SHALL BE INSTALLED ON ALL SIDES OF THE BRANCH FITTING. THE USE OF RETAINER GLANDS IN PLACE OF THRUST BLOCKS SHALL BE AT THE DISCRETION OF THE UTILITIES DEPT.
2. EACH FIRE HYDRANT INSTALLATION SHALL BE ITEMIZED FOR PAYMENT AT CONTRACT UNIT PRICES FOR ALL INDIVIDUAL MATERIAL AND FITTINGS REQUIRED TO COMPLETE THE ASSEMBLY.
3. THE CONTRACTOR SHALL SET OR TURN ALL FIRE HYDRANTS SO THE PUMPER NOZZLE FACES THE DRIVEN ROADWAY OR AS OTHERWISE DIRECTED BY THE UTILITIES DEPARTMENT.
4. WHERE FIRE HYDRANTS ARE LOCATED IN A HARD SURFACED ISLAND OR PARKING AREA, THE CONTRACTOR SHALL PROVIDE AN 18" BLOCK-OUT AROUND THE HYDRANT BARREL FILLED WITH COMPACTED SOIL.
5. FIRE HYDRANTS SHALL BE INSTALLED A MINIMUM OF 18" FROM THE EDGE OF ANY SIDEWALK AND A MINIMUM OF 6' FROM ANY DRIVING LANE.
6. FIRE HYDRANT SHALL BE SET ON COMMON PAVER BLOCK TO ESTABLISH CORRECT ELEVATION.
7. FITTINGS AND ETC... FOR VERTICAL ADJUSTMENT MAY USED DOWNSTREAM OF THE HYDRANT AUXILARY VALVE WITH APPROVAL OF THE UTILITIES DEPT.

FIRE HYDRANT TYPICAL
INSTALLATION TYPE 3

LEGEND

TRAVERSE OR CONTROL POINT (AS NOTED)
BENCH MARK
PROPERTY CORNER (AS NOTED)
SOIL BORE LOCATION
EXISTING FIRE HYDRANT
EXISTING MANHOLE
POWER POLE
GUY ANCHOR

LIGHT POLE
BARBED WIRE FENCE
WOODEN FENCE
CHAINLINK FENCE
RIGHT-OF-WAY/PROPERTY LINE
SECTION LINE
EASEMENT LINE
SECTION CORNER
QUARTER-SECTION CORNER

MAJOR CONTOUR LINE
MINOR CONTOUR LINE
WATER SHUT-OFF
EXISTING VALVE
[redacted]
WATER MAIN TO BE INSTALLED
EXISTING WATER MAIN (AS NOTED)
U.G. FIBER OPTIC LINE (AS NOTED)
U.G. TELEPHONE LINE (AS NOTED)

U.G. TV LINE (AS NOTED)
U.G. GAS LINE (AS NOTED)
U.G. ELECTRICAL LINE (AS NOTED)
OVERHEAD ELECTRICAL LINE (AS NOTED)
[redacted]
U.G. ELEC. LINE TO BE INSTALLED
OVERHEAD ELEC. LINE TO BE INSTALLED
POWER POLE TO BE INSTALLED

PROFESSIONAL CIVIL ENGINEER
JAMIE L. ROYER
STATE OF NEBRASKA

REVISIONS			
DATE	BY	DESCRIPTION	
			SURV. BY: T.J.Y.
			DATE: 03/28/19
			DR. BY: T.J.Y.
			DATE: 05/08/19
			CHK. BY: J.R.
			DATE: 02/07/20
			APPR. BY:
			DATE:
			HORZ.:
			VERT.:

CITY OF GRAND ISLAND
UTILITIES DEPARTMENT

WATER MAIN PROJECT 2020-W-5
PLEASANT VIEW DR SEWER CONFLICTS
GENERAL INFORMATION

DRAWING NO.: F-482
2 / 6

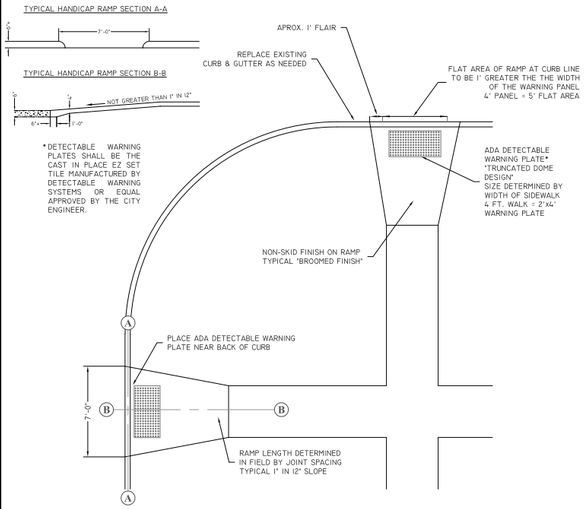

HANDICAP RAMP
TYPE 1

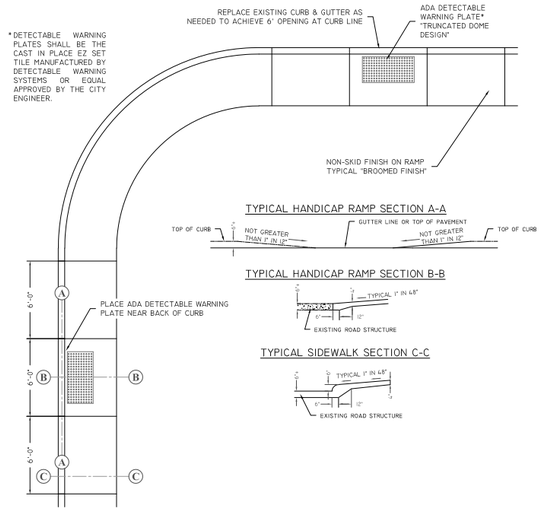

HANDICAP RAMP
TYPE 2

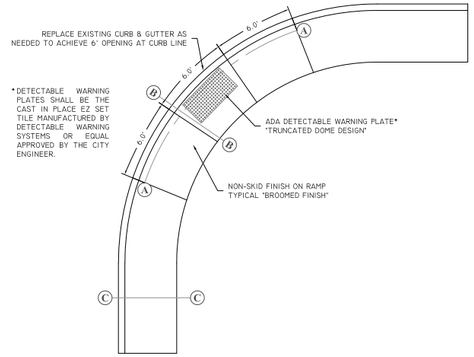

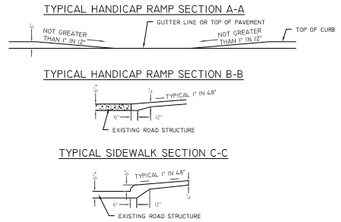

HANDICAP RAMP
TYPE 3

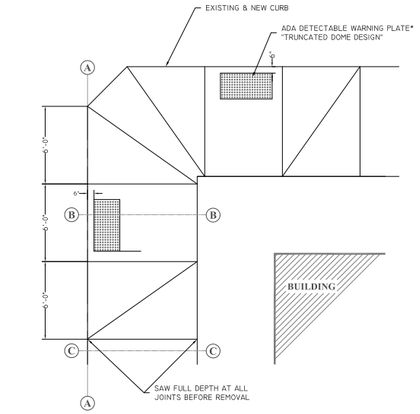

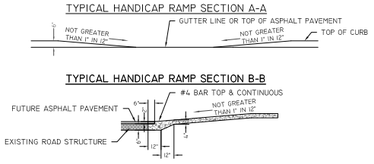

HANDICAP RAMP
TYPE 4

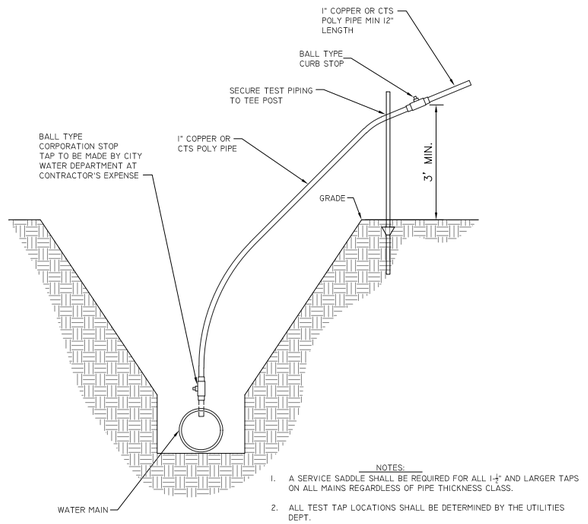

WATER MAIN TESTING & SAMPLING TAP

LEGEND

TRAVERSE OR CONTROL POINT (AS NOTED)	LIGHT POLE	1800	MAJOR CONTOUR LINE
BENCH MARK	BARBED WIRE FENCE	1800	MINOR CONTOUR LINE
PROPERTY CORNER (AS NOTED)	WOODEN FENCE	WSO	WATER SHUT-OFF
SOIL BORE LOCATION	CHAINLINK FENCE		EXISTING VALVE
HYD EXISTING FIRE HYDRANT	RIGHT-OF-WAY/PROPERTY LINE		FIRE HYDRANT TO BE INSTALLED
EXISTING MANHOLE	SECTION LINE		WATER MAIN TO BE INSTALLED
POWER POLE	EASEMENT LINE	V V	EXISTING WATER MAIN (AS NOTED)
GUY ANCHOR	SECTION CORNER	FO FO	U.G. FIBER OPTIC LINE (AS NOTED)
	QUARTER-SECTION CORNER	T T	U.G. TELEPHONE LINE (AS NOTED)

TV TV	U.G. TV LINE (AS NOTED)
G G	U.G. GAS LINE (AS NOTED)
UGE	U.G. ELECTRICAL LINE (AS NOTED)
OHE	OVERHEAD ELECTRICAL LINE (AS NOTED)
	SANITARY SEWER LINE (AS NOTED)
	U.G. ELEC. LINE TO BE INSTALLED
OE	OVERHEAD ELEC. LINE TO BE INSTALLED
	OVERHEAD ELEC. LINE (AS NOTED)

THIS DRAWING WAS CREATED AND ISSUED BY JAMIE L ROYER ON 07-17-2020. DRAWINGS MARKED AS PRELIMINARY SHALL NOT BE USED FOR CONSTRUCTION PURPOSES.

PROFESSIONAL CIVIL ENGINEER — JAMIE L ROYER — STATE OF NEBRASKA

REVISIONS			SURV. BY: T.J.Y.
DATE	BY	DESCRIPTION	DATE: 03/28/19
			DR. BY: T.J.Y.
			DATE: 05/08/19
			CHK. BY: J.R.
			DATE: 02/07/20
			APPR. BY:
			DATE:
			HORZ.:
			VERT.:

CITY OF GRAND ISLAND
UTILITIES DEPARTMENT

WATER MAIN PROJECT 2020-W-5
PLEASANT VIEW DR SEWER CONFLICTS
GENERAL INFORMATION

DRAWING NO.: F-482 | 3 | 6

PHASE I

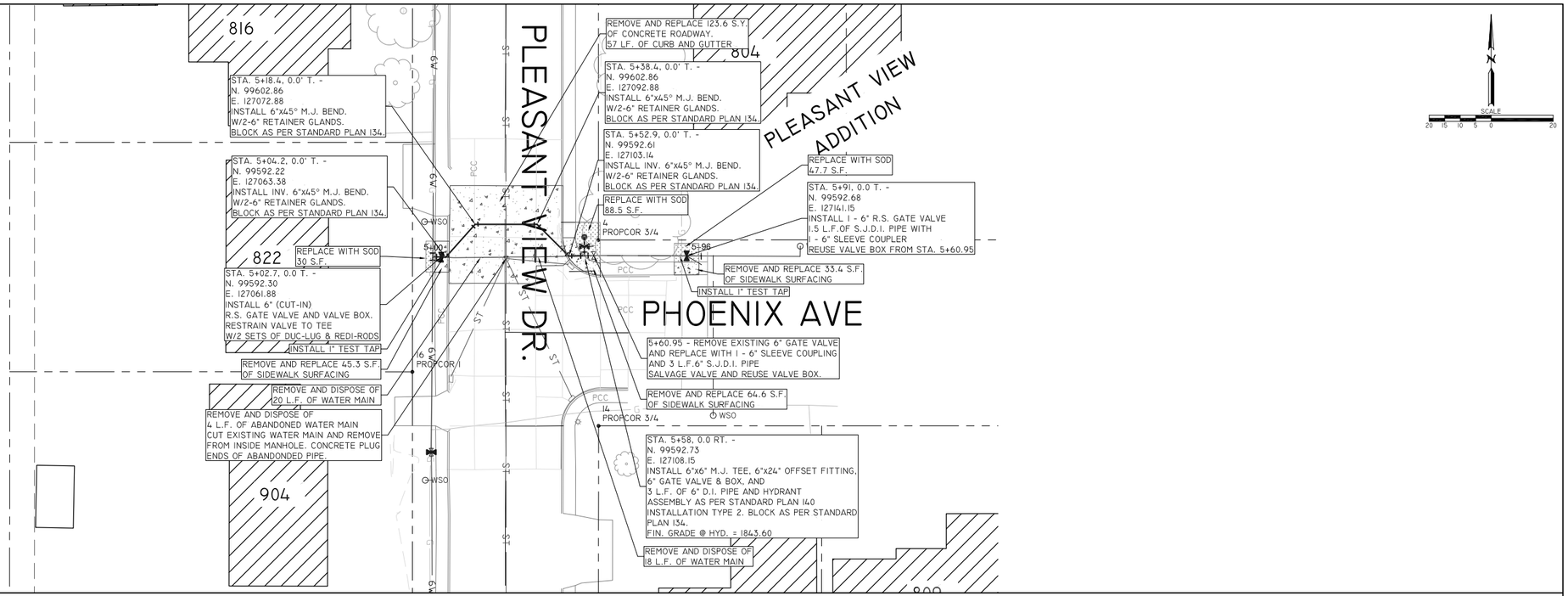

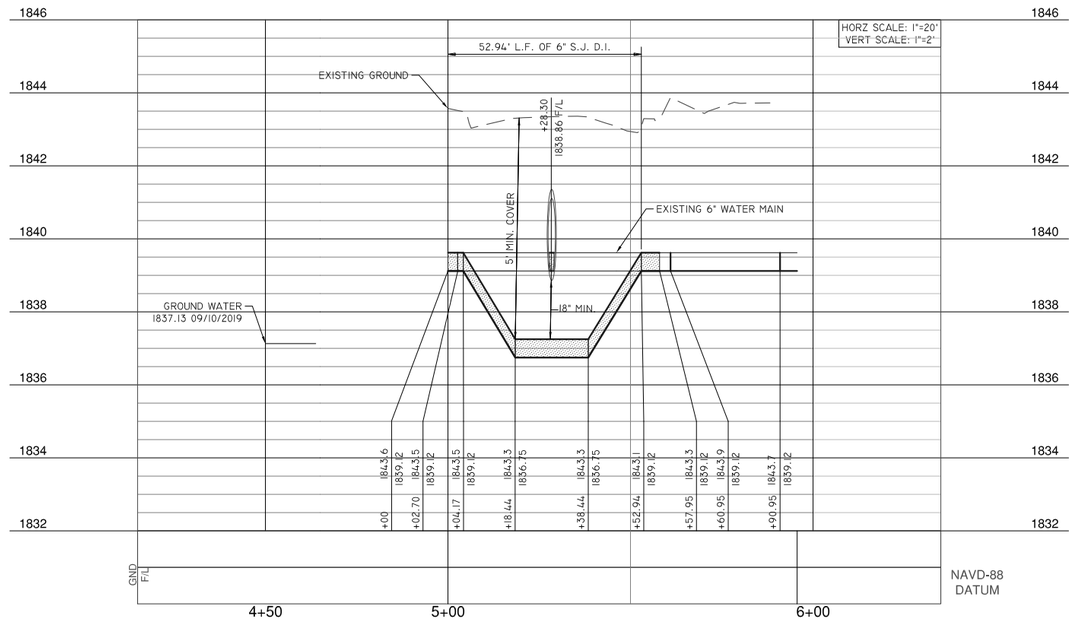

LEGEND

TRAVERSE OR CONTROL POINT (AS NOTED)	LIGHT POLE	1800 MAJOR CONTOUR LINE	TV TV U.G. TV LINE (AS NOTED)
BENCH MARK	BARBED WIRE FENCE	1800 MINOR CONTOUR LINE	G G U.G. GAS LINE (AS NOTED)
PROPERTY CORNER (AS NOTED)	WOODEN FENCE	WSO WATER SHUT-OFF	UGE U.G. ELECTRICAL LINE (AS NOTED)
SOIL BORE LOCATION	CHAINLINK FENCE	EXISTING VALVE	OHE OVERHEAD ELECTRICAL LINE (AS NOTED)
HYD EXISTING FIRE HYDRANT	RIGHT-OF-WAY/PROPERTY LINE	FIRE HYDRANT TO BE INSTALLED	SANITARY SEWER LINE (AS NOTED)
EXISTING MANHOLE	SECTION LINE	WATER MAIN TO BE INSTALLED	U.G. ELEC. LINE TO BE INSTALLED
POWER POLE	EASEMENT LINE	V V EXISTING WATER MAIN (AS NOTED)	OHE OVERHEAD ELEC. LINE TO BE INSTALLED
GUY ANCHOR	SECTION CORNER	FO FO U.G. FIBER OPTIC LINE (AS NOTED)	SANITARY SEWER LINE TO BE INSTALLED
	QUARTER-SECTION CORNER	T T U.G. TELEPHONE LINE (AS NOTED)	

THIS DRAWING WAS PREPARED BY OR UNDER THE DIRECT SUPERVISION OF THE FOLLOWING PROFESSIONAL ENGINEER AND WAS ISSUED ON THE DATE SHOWN. IT WAS NOT INTENDED OR REPRESENTED TO BE SUITABLE FOR REUSE BY OWNER OR OTHERS ON EXTENSIONS OF THE PROJECT OR ON ANY OTHER PROJECT. ANY REUSE WITHOUT WRITTEN VERIFICATION OR ADAPTATION BY THE ENGINEER FOR THE SPECIFIC PURPOSE INTENDED WILL BE AT OWNER'S SOLE RISK AND WITHOUT LIABILITY OR LEGAL EXPOSURE TO THE ENGINEER. ANY MODIFICATIONS MADE TO THIS DRAWING BY ANY PARTY OTHER THAN THE ENGINEER WILL RELIEVE THE ENGINEER OF ALL RESPONSIBILITY FOR THE USE OF THE DRAWING. THIS DRAWING IS FOR CONSTRUCTION PURPOSES ONLY

PROFESSIONAL CIVIL ENGINEER
JAMIE L. ROYER
STATE OF NEBRASKA

REVISIONS			SURV. BY: T.J.Y.
DATE	BY	DESCRIPTION	DATE: 03/28/19
			DR. BY: T.J.Y.
			DATE: 05/08/19
			CHK. BY: J.R.
			DATE: 02/07/20
			APPR. BY:
			DATE:
			HORZ.:
			VERT.:

CITY OF GRAND ISLAND
UTILITIES DEPARTMENT

2020-W-5
PLEASANT VIEW DR SEWER CONFLICTS
PLAN AND PROFILE PHOENIX AVE

DRAWING NO.: F-482

4 6

PHASE II

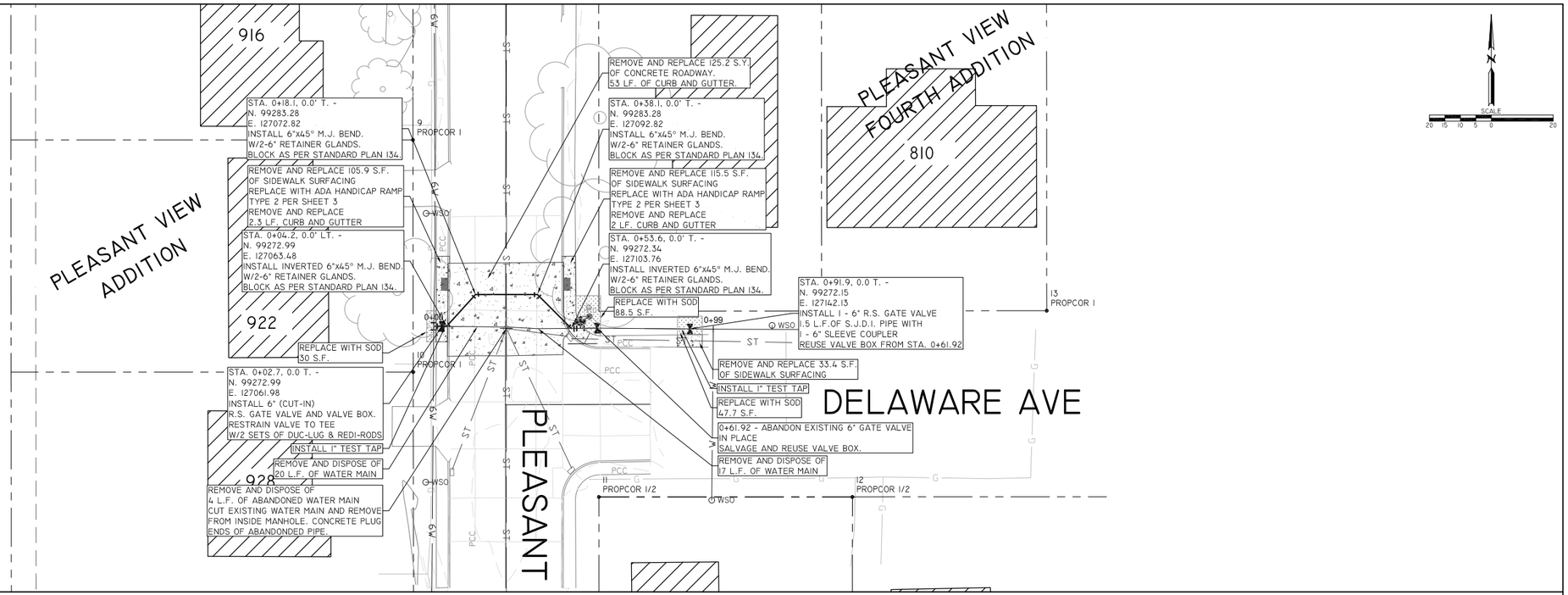

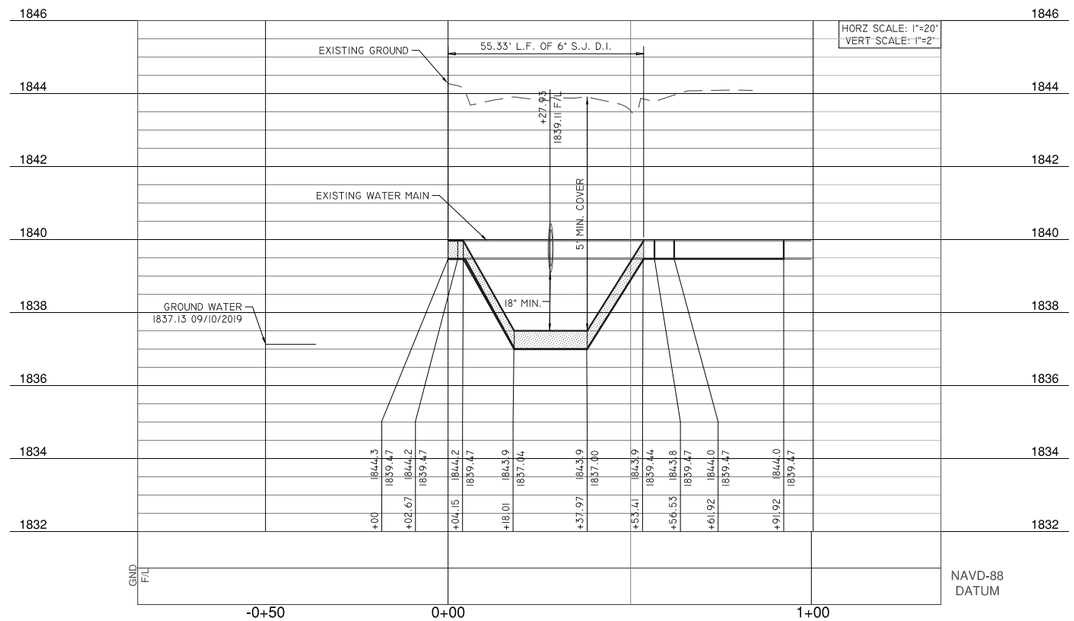

LEGEND

- TRAVERSE OR CONTROL POINT (AS NOTED)
- BENCH MARK
- PROPERTY CORNER (AS NOTED)
- SOIL BORE LOCATION
- HYD EXISTING FIRE HYDRANT
- EXISTING MANHOLE
- POWER POLE
- GUY ANCHOR
- LIGHT POLE
- BARBED WIRE FENCE
- WOODEN FENCE
- CHAINLINK FENCE
- RIGHT-OF-WAY/PROPERTY LINE
- SECTION LINE
- EASEMENT LINE
- SECTION CORNER
- QUARTER-SECTION CORNER
- 1800 MAJOR CONTOUR LINE
- 1800 MINOR CONTOUR LINE
- WSO WATER SHUT-OFF
- EXISTING VALVE
- SANITARY SEWER LINE (AS NOTED)
- EXISTING WATER MAIN (AS NOTED)
- U.G. FIBER OPTIC LINE (AS NOTED)
- U.G. TELEPHONE LINE (AS NOTED)
- U.G. TV LINE (AS NOTED)
- U.G. GAS LINE (AS NOTED)
- U.G. ELECTRICAL LINE (AS NOTED)
- OVERHEAD ELECTRICAL LINE (AS NOTED)

PROFESSIONAL CIVIL ENGINEER — JAMIE L. ROYER — STATE OF NEBRASKA

REVISIONS			
DATE	BY	DESCRIPTION	
			SURV. BY: T.J.Y.
			DATE: 03/28/19
			DR. BY: T.J.Y.
			DATE: 05/08/19
			CHK. BY: J.R.
			DATE: 02/07/20
			APPR. BY:
			DATE:
			HORZ.:
			VERT.:

CITY OF GRAND ISLAND
UTILITIES DEPARTMENT

WATER MAIN PROJECT 2020-W-5
PLEASANT VIEW DR SEWER CONFLICTS
PLAN AND PROFILE DELAWARE AVE

DRAWING NO.: F-482

5
6

PHASE I

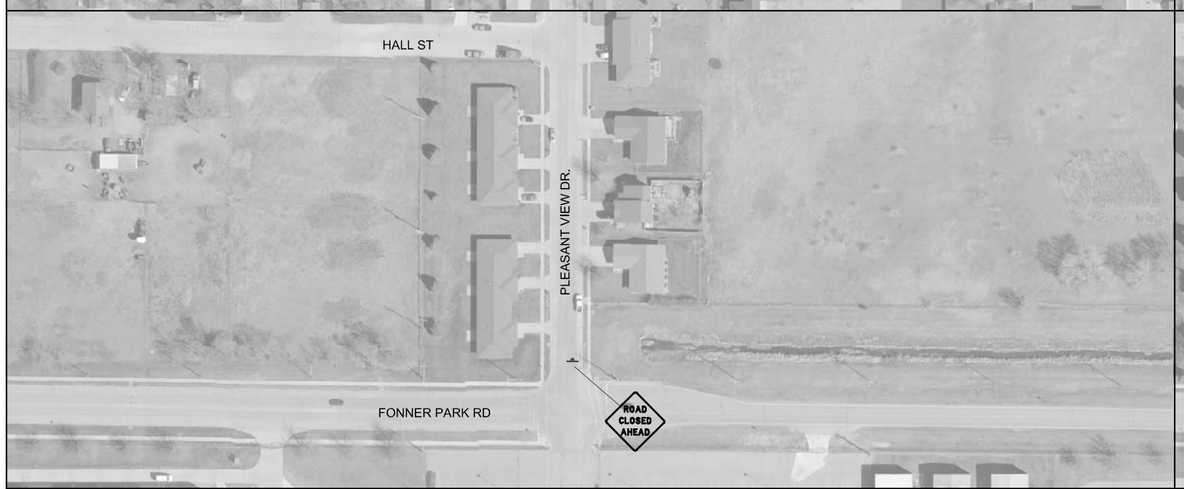

PHASE II

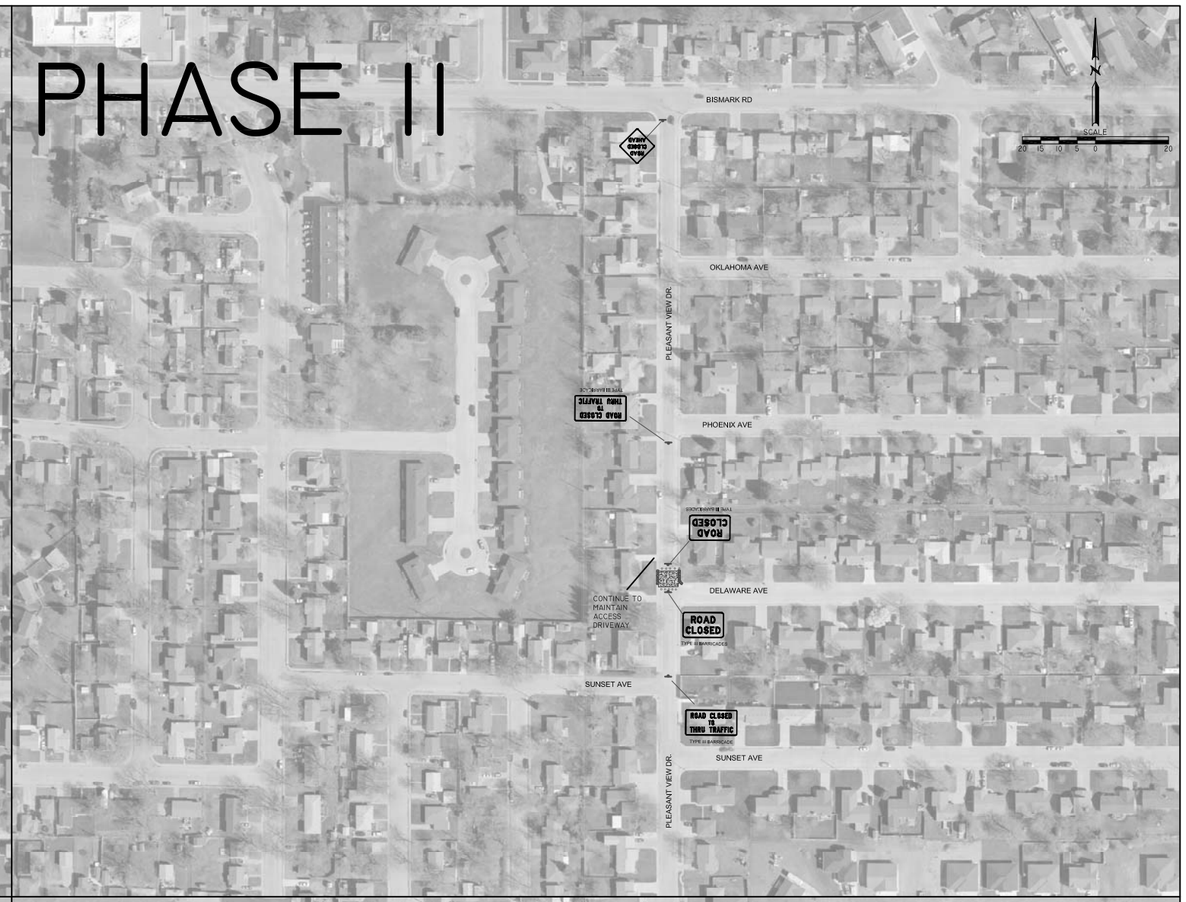

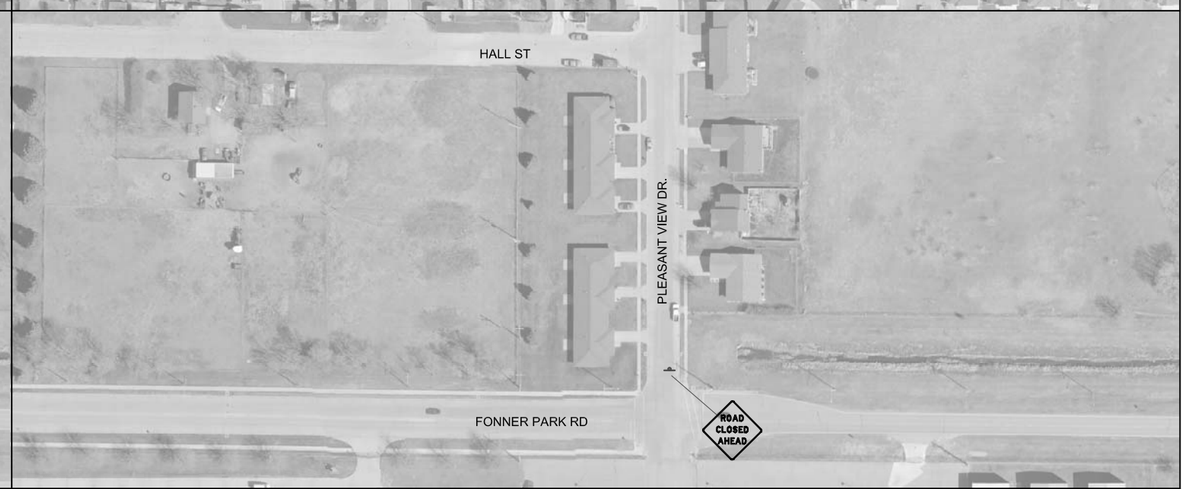

LEGEND

TRAVERSE OR CONTROL POINT (AS NOTED)	LIGHT POLE	MAJOR CONTOUR LINE	U.G. TV LINE (AS NOTED)
BENCH MARK	BARBED WIRE FENCE	MINOR CONTOUR LINE	U.G. GAS LINE (AS NOTED)
PROPERTY CORNER (AS NOTED)	WOODEN FENCE	WATER SHUT-OFF	U.G. ELECTRICAL LINE (AS NOTED)
SOIL BORE LOCATION	CHAINLINK FENCE	EXISTING VALVE	OVERHEAD ELECTRICAL LINE (AS NOTED)
EXISTING FIRE HYDRANT	RIGHT-OF-WAY/PROPERTY LINE		
EXISTING MANHOLE	SECTION LINE		
POWER POLE	EASEMENT LINE		
GUY ANCHOR	SECTION CORNER	EXISTING WATER MAIN (AS NOTED)	OVERHEAD ELEC. LINE TO BE INSTALLED
	QUARTER-SECTION CORNER	U.G. FIBER OPTIC LINE (AS NOTED)	
		U.G. TELEPHONE LINE (AS NOTED)	

PROFESSIONAL CIVIL ENGINEER — STATE OF NEBRASKA — JAMIE ROYER

REVISIONS			SURV. BY: T.J.Y.
DATE	BY	DESCRIPTION	DATE: 03/28/19
			DR. BY: T.J.Y.
			DATE: 05/08/19
			CHK. BY: J.R.
			DATE: 02/07/20
			APPR. BY:
			DATE:
			HORZ.:
			VERT.:

CITY OF GRAND ISLAND
UTILITIES DEPARTMENT

WATER MAIN PROJECT 2020-W-5
PLEASANT VIEW DR SEWER CONFLICTS
TRAFFIC CONTROL PLAN

DRAWING NO.: F-482 | 6 | 6

R E S O L U T I O N 2020-69

WHEREAS, the City of Grand Island invited sealed bids for the construction of Water Main Project 2020-W-5 – Pleasant View Drive/Phoenix & Prairie View Drive/Delaware, according to plans and specifications on file with the Utilities Department; and

WHEREAS, on March 10, 2020, bids were received, opened and reviewed; and

WHEREAS, Starostka Group, Unlimited, submitted a bid in accordance with the terms of the advertisement of bids and plans and specifications and all other statutory requirements contained therein, such bid being in the amount of $98,855.06; and

WHEREAS, the bid of the Starostka Group is less than the estimate for construction of Water Main Project 2020-W-5 – Pleasant View Drive/Phoenix & Prairie View Drive/Delaware.

NOW, THEREFORE, BE IT RESOLVED BY THE MAYOR AND COUNCIL OF THE CITY OF GRAND ISLAND, NEBRASKA, that the bid of the Starostka Group Unlimited, in the amount of $98,855.06 for construction of Water Main Project 2020-W-5, is hereby approved as the lowest responsible bid.

- - -

Adopted by the City Council of the City of Grand Island, Nebraska, March 24, 2020.

_____
Roger G. Steele, Mayor

Attest:

_____
RaNae Edwards, City Clerk

Approved as to Form ¤ _____
March 20, 2020 ¤ City Attorney